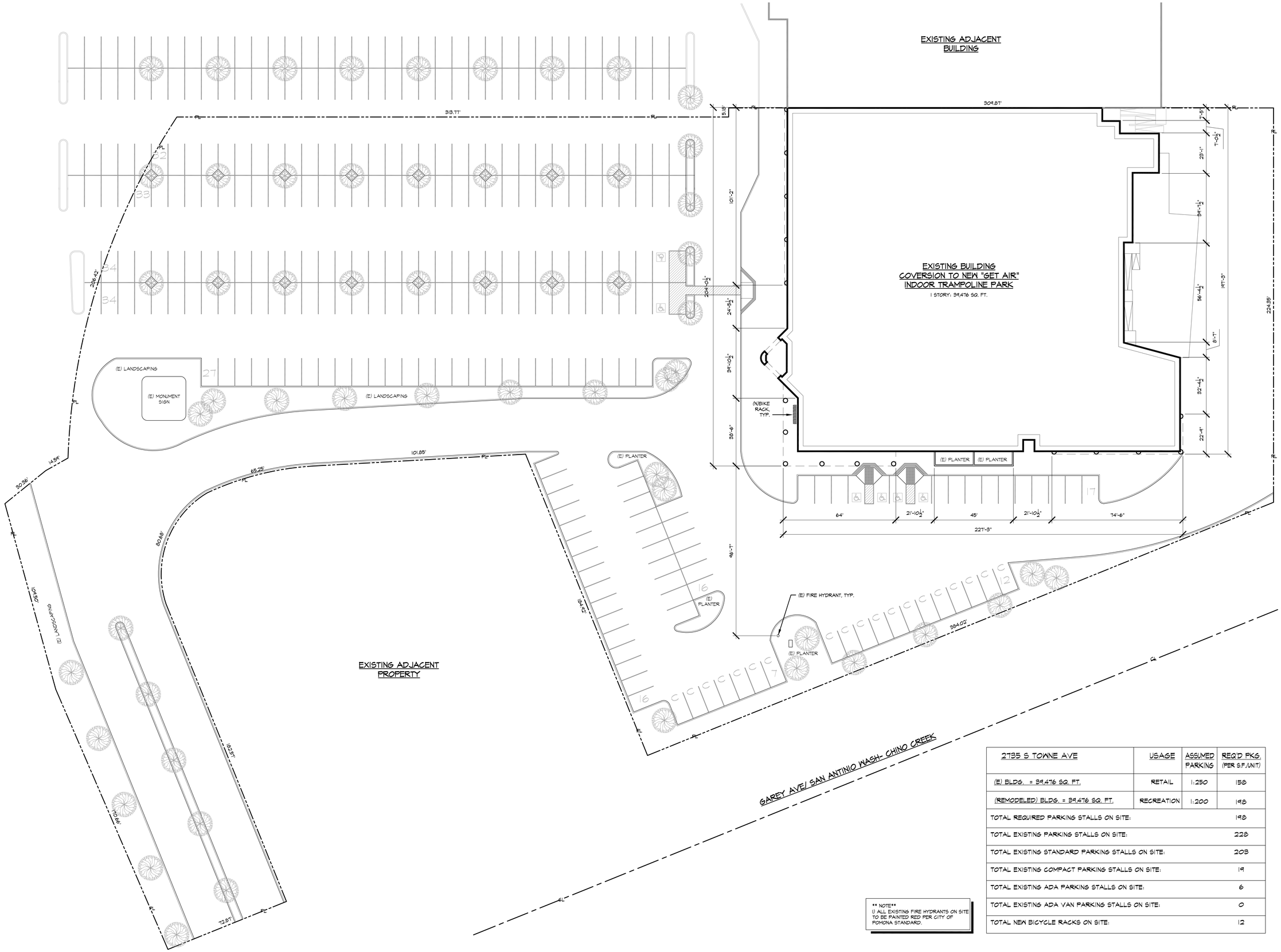

2735 S TOWNE AVE	USAGE	ASSUMED PARKING	REQ'D PKG. (PER S.F./UNIT)
(E) BLDG. = 39,476 SQ. FT.	RETAIL	1:250	158
(REMODELED) BLDG. = 39,476 SQ. FT.	RECREATION	1:200	198
TOTAL REQUIRED PARKING STALLS ON SITE:			198
TOTAL EXISTING PARKING STALLS ON SITE:			228
TOTAL EXISTING STANDARD PARKING STALLS ON SITE:			203
TOTAL EXISTING COMPACT PARKING STALLS ON SITE:			19
TOTAL EXISTING ADA PARKING STALLS ON SITE:			6
TOTAL EXISTING ADA VAN PARKING STALLS ON SITE:			0
TOTAL NEW BICYCLE RACKS ON SITE:			12

** NOTE**
1) ALL EXISTING FIRE HYDRANTS ON SITE TO BE PAINTED RED PER CITY OF POMONA STANDARD.

north EXISTING SITE PLAN
SCALE: 1"=20'-0"

THESE DRAWINGS AND SPECIFICATIONS ARE THE SOLE PROPERTY OF WHEELER & WHEELER ARCHITECTS, INC. AND SHALL NOT BE REPRODUCED WITHOUT WET STAMP AND SIGNATURE OF ARCHITECT OF RECORD. THESE DRAWINGS AND SPECIFICATIONS NOT TO BE USED FOR ANY OTHER WORK, OR PORTION THEREOF, THAN THAT NOTED ON TITLE BLOCK. PLEASE SEND ALL INQUIRIES TO: 505 E. 24 ST. 505-24-505 IF ANY ATTEMPT IS MADE TO DO SO
© 2011 WHEELER & WHEELER ARCHITECTS, INC.

NO.	DATE	REVISION
1	10.28.15	PLAN CHECK SUBMITTAL
2	12.14.15	PLAN CHECK REVISIONS

WHEELER & WHEELER
ARCHITECTS
ARCHITECTURE ■ INTERIORS ■ PLANNING
133 South Spring Street, Claremont, California 91711 909-624-5095 FAX 909-621-7757
PAUL R. WHEELER AIA REGISTERED ARCHITECT C12183 MARSHA M. WHEELER AIA REGISTERED ARCHITECT C14183

EXISTING/NEW SITE PLAN
TENANT IMPROVEMENT & EXTERIOR FACADE IMPROVEMENTS for:
Get Air
S.E. Quadrant, Pomona 60 FWY at Corona Expressway
Pomona, California 91766

APN NO. 8331-016-021

DATE	JOB NO.	DRAWN BY
03.04.15	AIR-2521	LMS

DRAWING NO.
A0.0

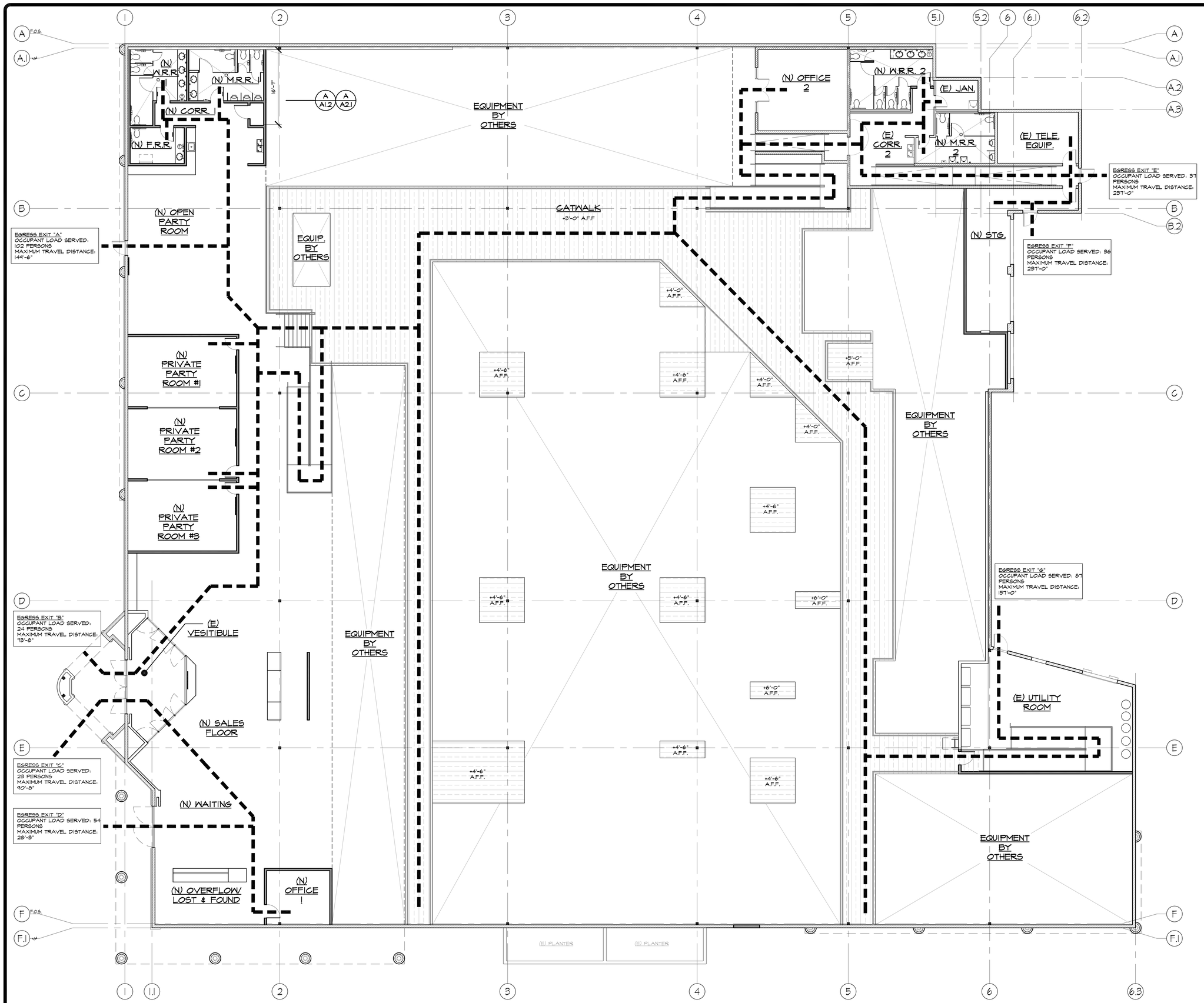

EMERGENCY EVACUATION PLAN

SCALE: 1/8"=1'-0"

SYMBOLS LEGEND:

- (E) MASONRY WALL TO REMAIN, TYP.
- (E) 4" METAL STUD WALL TO REMAIN, TYP.
- (E) 2X WD. STUD WALL TO REMAIN, TYP.
- (N) 2X METAL STUD WALL, 11 FT HEIGHT, TYP. FOR DETAILS SEE:
  - 1 D1.0, 3 D1.0, 5 D1.0, 6 D1.0, 14 D1.0
  - 15 D1.0, 19 D1.0, 20 D1.0, 25 D1.0
- (N) TOILET PARTITION, MANUFACTURER, FINISH AND HARDWARE TBD BY OWNER, TYP.
- (N) EMERGENCY EGRESS PATH, TYP.

FIRE DEPARTMENT NOTES:

1. BUILDING ADDRESS NUMBERS SHALL BE PROVIDED AND MAINTAINED SO AS TO BE PLAINLY VISIBLE AND LEGIBLE FROM THE STREET FRONTING THE PROPERTY. THE NUMBERS SHALL BE A MINIMUM 3 INCHES HIGH, 1 INCH WIDE WITH A 3/8" STROKE. FOR BUILDINGS SET BACK MAORE THAN 150 FEET FROM THE STREET, THE NUMBERS SHALL BE A MINIMUM 5 INCHES HIGH, 2 INCHES WIDE WITH A 1/2 INCH STROKE. FIRE CODE 901.4.4.
2. THE REQUIRED FIRE FLOW FOR PUBLIC FIRE HYDRANTS AT THIS LOCALTION IS 2,500 GPM, AT 20 PSI RESIDUAL PRESSURE, FOR A DURATION OF 2 HOURS OVER AND ABOVE MAXIMUM DAILY DOMESTIC DEMAND. FIRE CODE 903.2 AND FIRE DEPARTMENT REGULATION-8.

   THE REQUIRED FIRE FLOW IS BASED ON THE FOLLOWING CALCULATION.
   BASIC FIRE FLOW: 2,500 GPM
   (MINIMUM REQUIRED 2,000 GPM)
   REDUCTION FOR FIRE SPRINKLERS AND/OR CONSTRUCTION TYPE:
   25% = 625 GPM

   A. THE REQUIRED FIRE FLOW FOR A SINGLE PRIVATE ON-SITE FIRE HYDRANT AT THIS LOCATION IS 1,250 GPM AT 20 PSI REDISUAL PRESSURE. IF MORE THAN ONE ON-SITE FIRE HYDRANT IS REQUIRED, THE ON-SITE FIRE LOW SHALL BE THE SAME AS REQUIRED FOR PUBLIC FIRE HYDRANTS IN ACCORDANCE WITH APPENDIX TABLE B105.1. FIRE CODE C106

3. PROVIDE APPROVED SIGNS OR APPROVED NOTICES OR MARKINGS THAT INCLUDE THE WORDS NO PARKING-FIRE LANE. SIGNS SHALL HAVE A MINIMUM DIMENSION OF 12 INCHES WIDE BY 18 INCHES HIGH AND HAVE RED LETTERS ON A WHITE REFLECTIVE BACKGROUND. SIGNS SHALL BE PROVIDED FOR FIRE APPARATUS ACCESS ROADS, TO CLEARLY INDICATE THE ENTRANCE TO SUCH ROAD, OR PROHIBIT THE OBSTRUCTION THEREOF AND AT INTERVALS, AS REQUIRED BY THE FIRE INSPECTOR.
4. THE MEANS OF EGRESS TRAVEL SHALL BE ILLUMINATED AT ANY TIME THE BUILDILNG IS OCCUPIED WITH A LIGHT INTENSITY OF NOT LESS THAN 1 FOOT-CANDLE AT THE FLOOR LEVEL. BUILDINGS CODE 1003.2.9.1.
5. PORTABLE FIRE EXTINGUISHER REQUIREMENTS SHALL BE INSTALLED IN LOCATIONS AS REQUIRED BY FIRE CODE 906.
6. DUMPSTERS AND CONTAINERS WITH AN INDIVIDUAL CAPACITY OF 1.5 CUBIC YARDS (40.5 CU. FT.) OR MORE SHALL NOT BE STORED IN BUILDINGS OR PLACED WITHIN 5 FEET OF COMBUSTIBLE ROOF EAVES, UNLESS AREAS CONTAINING DUMPSTERS OR CONTAINERS ARE PROTECTED BY AN APPROVED AUTOMATIC FIRE SPRINKLER SYSTEM. FIRE CODE 1109.2.2.
7. ALL FIRE HYDRANTS SHALL MEASURE 6" X 4" X 2 1/2", BRASS OR BRONZE, CONFORMING TO AMERICAN WATER WORKS ASSOCIATION STANDARD C503, OR APPROVED EQUAL, AND SHALL BE INSTALLED IN ACCORDANCE WITH THE COUNTY OF LOS ANGELES FIRE DEPARTMENT REGULATION 8.
8. THE POWER SUPPLY FOR MEANS OF EGRESS ILLUMINATION SHALL NORMALLY BE PROVIDED BY THE PREMISES ELECTRICAL SUPPLY. IN THE EVENT OF POWER SUPPLY FAILURE, THE EMERGENCY POWER SYSTEM SHALL PROVIDE POWER FOR A DURATION OF NOT LESS THAN 90 MINUTES AND SHALL CONSIST OF STORAGE BATTERIES, UNIT EQUIPMENT OR AN ON-SITE GENERATOR.
9. ALL DOORS IN A MEANS OF EGRESS FROM A GROUP A, OR ASSEMBLY AREA NOT CLASSIFIED AS AN ASSEMBLY OCCUPANCY HAVING AN OCCUPANT LOAD OF 50 OR MORE SHALL NOT BE PROVIDED WITH A LATCH OR LOCK UNLESS IT IS PANIC HARDWARE OR FIRE EXIT HARDWARE.
10. INTERIOR WALL AND CEILING FINISHES SHALL BE CLASSIFIED IN ACCORDANCE WITH BUILDING CODE 803 AND TABLE 803.5
11. CURTAINS, DRAPES AND OTHER DECORATIVE MATERIALS SUSPENDED FROM THE WALLS OR CEILINGS SHALL MEET THE FLAME SPREAD PROPAGATION PERFORMANCE CRITERIA OF NFPA 701 IN ACCORDANCE WITH SECTION 806.2 OR BE NON-COMBUSTABLE.

THESE DRAWINGS AND SPECIFICATIONS ARE THE SOLE PROPERTY OF WHEELER & WHEELER ARCHITECTS, INC. AND SHALL NOT BE REPRODUCED WITHOUT WET STAMP AND SIGNATURE OF ARCHITECT OF RECORD. THEY SHALL NOT BE USED FOR ANY OTHER WORK, OR PORTION THEREOF, THAN THAT NOTED ON TITLE BLOCK. PLEASE CONTACT THE ARCHITECT OF RECORD AT 909.624.5095 IF ANY ATTEMPT IS MADE TO DO SO.
© 2011 WHEELER & WHEELER ARCHITECTS, INC.

NO.	DATE	REVISION
1	10.28.15	PLAN CHECK SUBMITTAL
2	12.14.15	PLAN CHECK REVISIONS

WHEELER & WHEELER
ARCHITECTS
ARCHITECTURE ■ INTERIORS ■ PLANNING
133 South Spring Street, Claremont, California 91711 909-624-5095 FAX 909-621-7757
PAUL R. WHEELER AIA REGISTERED ARCHITECT C12180 MARSHA M. WHEELER AIA REGISTERED ARCHITECT C12183

EMERGENCY EVACUATION PLAN

TENANT IMPROVEMENT & EXTERIOR FACADE IMPROVEMENTS for:

Get Air

S.E. Quadrant, Pomona 60 FWY at Corona Expressway
Pomona, California 91766

APN NO. 8331-016-021

DATE	JOB NO.	DRAWN BY
08.04.15	AIR-2521	LMS

DRAWING NO. FD—1

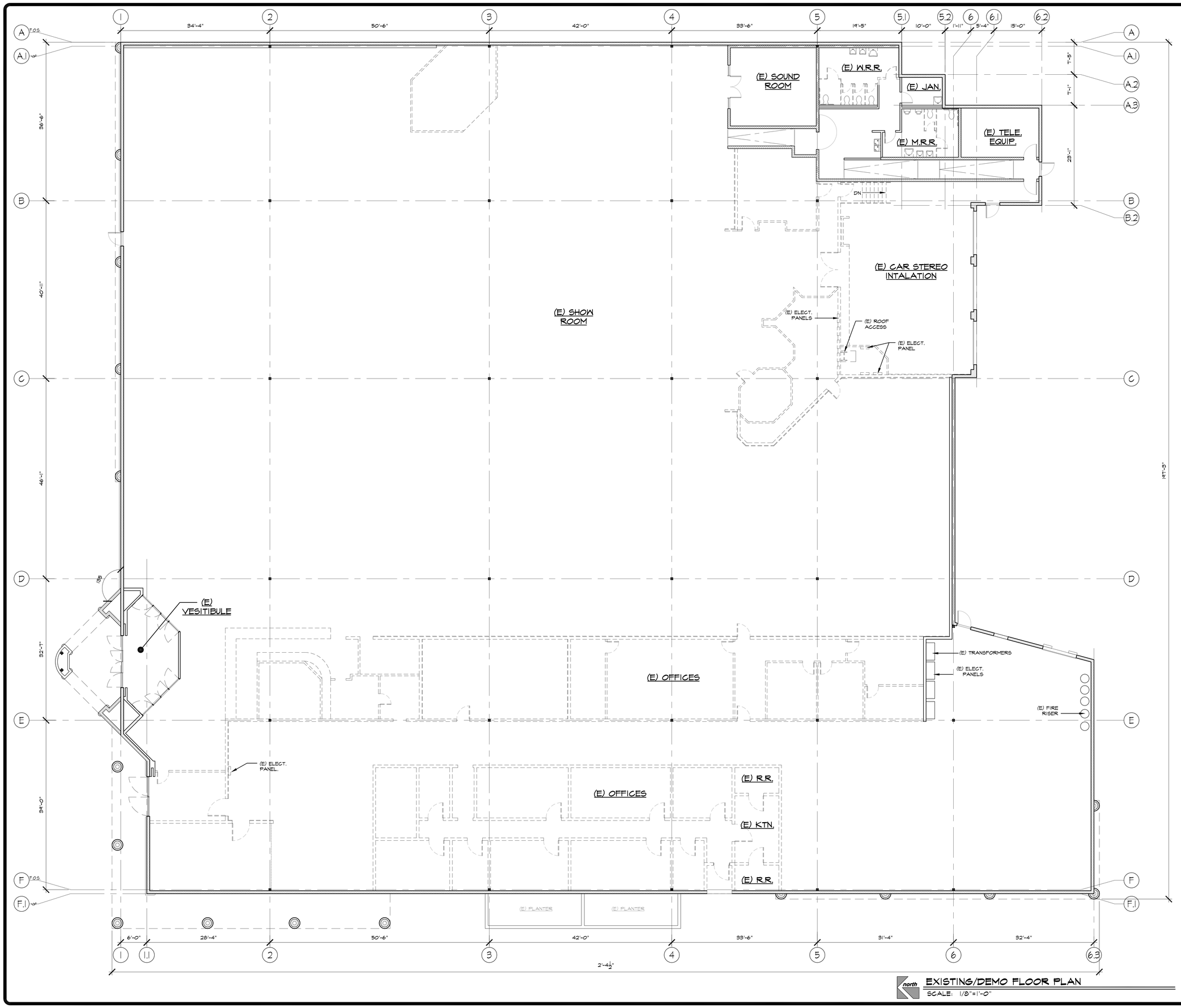

SYMBOLS LEGEND:

- (E) MASONRY WALL TO REMAIN, TYP.
- (E) 4" METAL STUD WALL TO REMAIN, TYP.
- (E) 2X WD. STUD WALL TO REMAIN, TYP.
- (E) WALL TO BE REMOVED IN ITS ENTIRETY, TYP.

EXISTING/DEMO FLOOR PLAN
SCALE: 1/8"=1'-0"

THESE DRAWINGS AND SPECIFICATIONS ARE THE SOLE PROPERTY OF WHEELER & WHEELER ARCHITECTS, INC. AND SHALL NOT BE REPRODUCED WITHOUT WET STAMP AND SIGNATURE OF ARCHITECT OF RECORD. REPRODUCTIONS MADE WITHOUT BE USED FOR ANY OTHER WORK, OR PORTION THEREOF, THAN THAT NOTED ON TITLE BLOCK. PLEASE CONTACT THE ARCHITECT OF RECORD AT 909.624.5095 IF ANY ATTEMPT IS MADE TO DO SO.
© 2011 WHEELER & WHEELER ARCHITECTS, INC.

NO.	DATE	REVISION
1	10.28.15	PLAN CHECK SUBMITTAL
2	12.14.15	PLAN CHECK REVISIONS

WHEELER & WHEELER
ARCHITECTS
ARCHITECTURE ■ INTERIORS ■ PLANNING
133 South Spring Street, Claremont, California 91711 909-624-5095 FAX 909-621-7757
PAUL R. WHEELER AIA REGISTERED ARCHITECT C12780 MARSHA M. WHEELER AIA REGISTERED ARCHITECT C14183

EXISTING/ DEMO FLOOR PLAN

TENANT IMPROVEMENT & EXTERIOR FACADE IMPROVEMENTS for:

Get Air

S.E. Quadrant, Pomona 60 FWY at Corona Expressway
Pomona, California 91766

DATE	JOB NO.	DRAWN BY
03.04.15	AIR-2521	LMS

DRAWING NO.
A0.1

APN NO. 8331-016-021

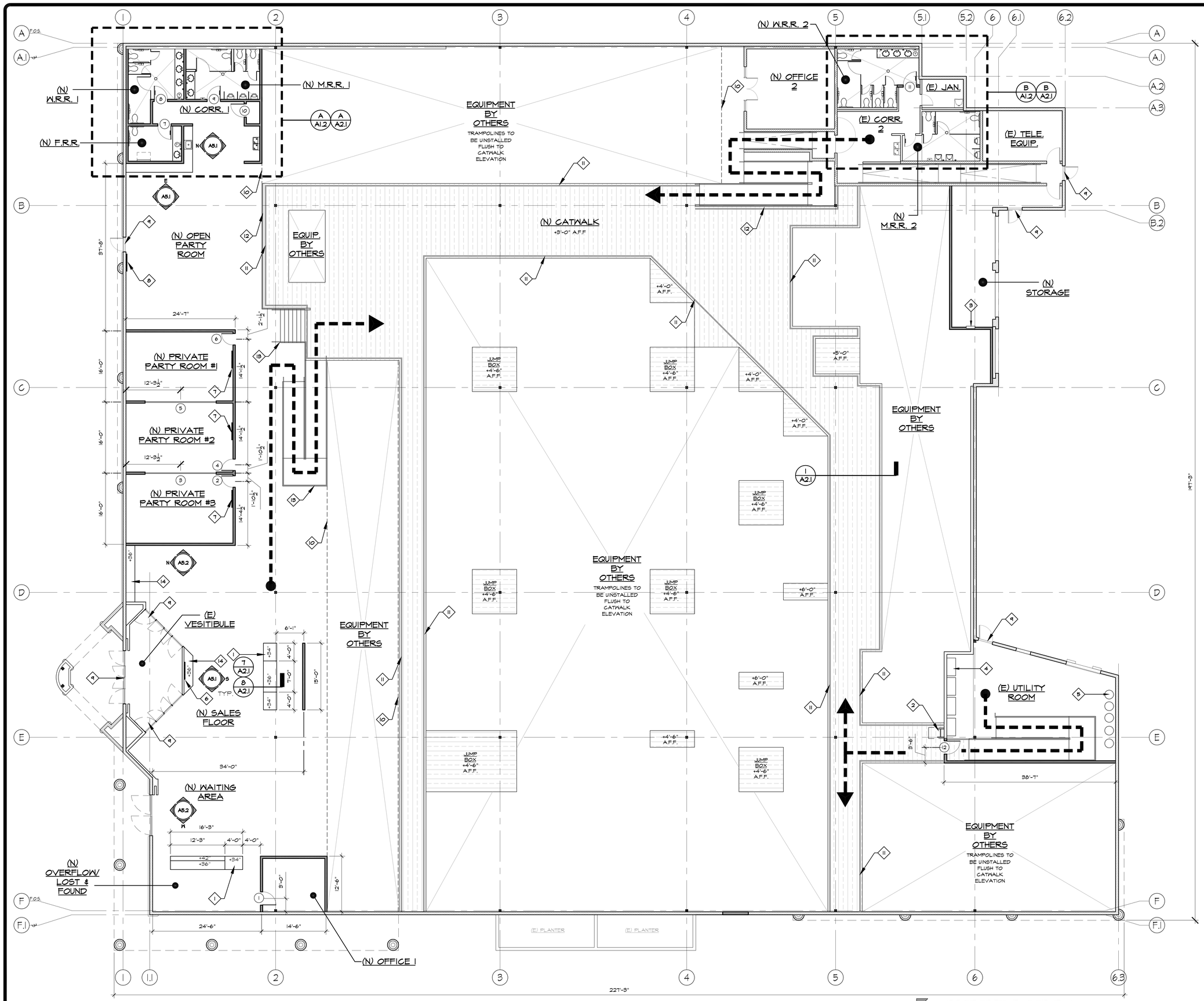

PROPOSED FLOOR PLAN

SCALE: 1/8"=1'-0"

SYMBOLS LEGEND:

- (E) MASONRY WALL TO REMAIN, TYP.
- (E) 4" METAL STUD WALL TO REMAIN, TYP.
- (E) 2X WD. STUD WALL TO REMAIN, TYP.
- (N) 2X METAL STUD WALL, 11 FT HEIGHT, TYP. FOR DETAILS SEE:
  - 1/D1.0, 3/D1.0, 5/D1.0, 6/D1.0, 14/D1.0
  - 15/D1.0, 19/D1.0, 20/D1.0, 25/D1.0
- (N) 2X METAL STUD WALL, 6 FT. HEIGHT, TYP. FOR DETAILS, REFERNCE NEW WALL ABOVE.
- (N) TOILET PARTITION, METAL, FINISH & HARDWAR TBD BY OWNER, TYP.

KEY NOTES

1. (N) BASE CABINETRY W/ COUNTER TOP, FINISH & HARDWARE TBD BY OWNER, TYP.
2. (N) ROOF ACCESS LADDER & HATCH W/ METAL LOCKING CAGE.
3. (E) ELECTRICAL PANEL, SEE ELECTRICAL DRAWINGS FOR DETAILED INFO, TYP.
4. (E) ELECTRICAL CABINET, TYP.
5. (E) FIRE RISER, TYP.
6. (N) SIGNAGE, "MAXIMUM OCCUPANCY 363 PERSONS", TYP.
7. (N) SIGNAGE, "MAXIMUM OCCUPANCY 8 PERSONS", TYP.
8. (N) SIGNAGE, "MAXIMUM OCCUPANCY 18 PERSONS", TYP.
9. (E) DOOR SYSTEM, FIT WITH NEW PANIC HARDWARE WHERE NONE EXISTS, TYP.
10. (N) SAFETY NET, MUST COMPLY W/ NFPA 701 IN ACCORDANCE WITH SECTION 806.2
11. (N) 2 INCH CONTRASTING STRIPE, YELLOW OR APPROVED ALTERNATE, TYP.
12. (N) 42" STEEL GUARDRAIL, PAINT TBD BY OWNER, TYP. FOR DETAILS SEE DETAIL 24 ON SHEET D1.2
13. (N) 36" HT. STEEL HANDRAIL, PAINT TBD BY OWNER, TYP. FOR DETAILS SEE DETAIL 12 ON SHEET D1.2
14. (N) COUNTER TOP, MOUNT TO WALL, MATERIAL & FINISH TBD BY OWNER, TYP.

GENERAL NOTES

1.) CONTRACTOR TO FIELD VERIFY ALL EXISTING DIMENSIONS PRIOR TO DEMOLITION, TYP.

2.) ALL EXISTING PANEL DOOR HARDWARE TO BE REMOVED AND REPLACED WITH NEW LEVER TYPE HARDWARE, TYP.
PRIVACY LOCKS TO BE INSTALLED AT ALL BATHROOM STALL DOORS.

4.) ALL EXITS WITH DEADBOLT AND TUMBLER STYLE LOCKS TO HAVE SIGNAGE INDICATING "THIS DOOR TO REMAIN UNLOCKED WHILE THE BUILDING IS OCCUPIED".

5.) ALL DUCT AND OTHER RELATED AIR DISTRIBUTION COMPONENT OPENINGS SHALL BE COVERED WITH TAPE, PLASTIC, OR SHEET METAL UNTIL THE FINAL START UP OF THE HEATING, COOLING AND VENTILATING EQUIPMENT.

6.) THE FORCE FOR PUSHING OR PULLING OPEN A DOOR OR GATE OTHER THAN FIRE DOORS SHALL BE AS FOLLOWS:
A. INTERIOR HINGED DOORS AND GATES: 5 POUNDS MAXIMUM.
B. SLIDING OR FOLDING DOORS: 5 POUNDS MAXIMUM.
C. REQUIRED FIRE DOORS: THE MINIMUM OPENING FORCE ALLOWABLE BY THE APPROPRIATE ADMINISTRATIVE AUTHORITY, NOT TO EXCEED 15 POUNDS.
D. EXTERIOR HINGED DOORS: 5 POUNDS MAXIMUM.

7.) ALL FIXTURES, EQUIPMENT AND PIPING MATERIALS SHALL BE LISTED.

8.) ALL FIXTURES SHALL MEET FLOW REQUIREMENTS LISTED IN THE CALIFORNIA GREEN BUILDING CODE.

NOTE

1.) ALL FLOOR & WALL FINISHES TDB BY OWNER, TYP.
2.) RESTROOM FLOOR FINISHES MUST BE A SMOOTH, HARD, NON-ABSORBENT SURFACE,TYP.
3.) RESTROOM WALLS MUST HAVE A SMOOTH, HARD, NON-ABSORBENT FINISH FROM FLOOR TO 48" A.F.F.,TYP.
4.) SHOP DRAWING SUBMITTALS REQUIRED FOR ALL CABINETRY AND COUNTER TOPS.

THESE DRAWINGS AND SPECIFICATIONS ARE THE SOLE PROPERTY OF WHEELER & WHEELER ARCHITECTS, INC. AND SHALL NOT BE REPRODUCED WITHOUT WET STAMP AND SIGNATURE OF ARCHITECT OF RECORD. THEY ARE TO BE RETURNED UPON REQUEST OR USED FOR ANY OTHER WORK, OR PORTION THEREOF, THAN THAT NOTED ON TITLE BLOCK. PLANS MUST BE FOLDED TO FIT WITHIN 22"x34" FOLDS. 405.624.5095 IF ANY ATTEMPT IS MADE TO DO SO.
© 2011 WHEELER & WHEELER ARCHITECTS, INC.

NO.	DATE	REVISION
1	10.28.15	PLAN CHECK SUBMITTAL
2	12.14.15	PLAN CHECK REVISIONS

WHEELER & WHEELER
ARCHITECTS
ARCHITECTURE ■ INTERIORS ■ PLANNING
133 South Spring Street, Claremont, California 91711 909-624-5095 FAX 909-621-7757
PAUL B. WHEELER AIA REGISTERED #C17280 MARSHA M. WHEELER AIA REGISTERED #C14283

NEW FLOOR PLAN

TENANT IMPROVEMENT & EXTERIOR FACADE IMPROVEMENTS for:

Get Air

S.E. Quadrant, Pomona 60 FWY at Corona Expressway
Pomona, California 91766

APN NO. 8331-016-021

DATE	JOB NO.	DRAWN BY
03.04.15	AIR-2521	LMS

DRAWING NO. A1.0

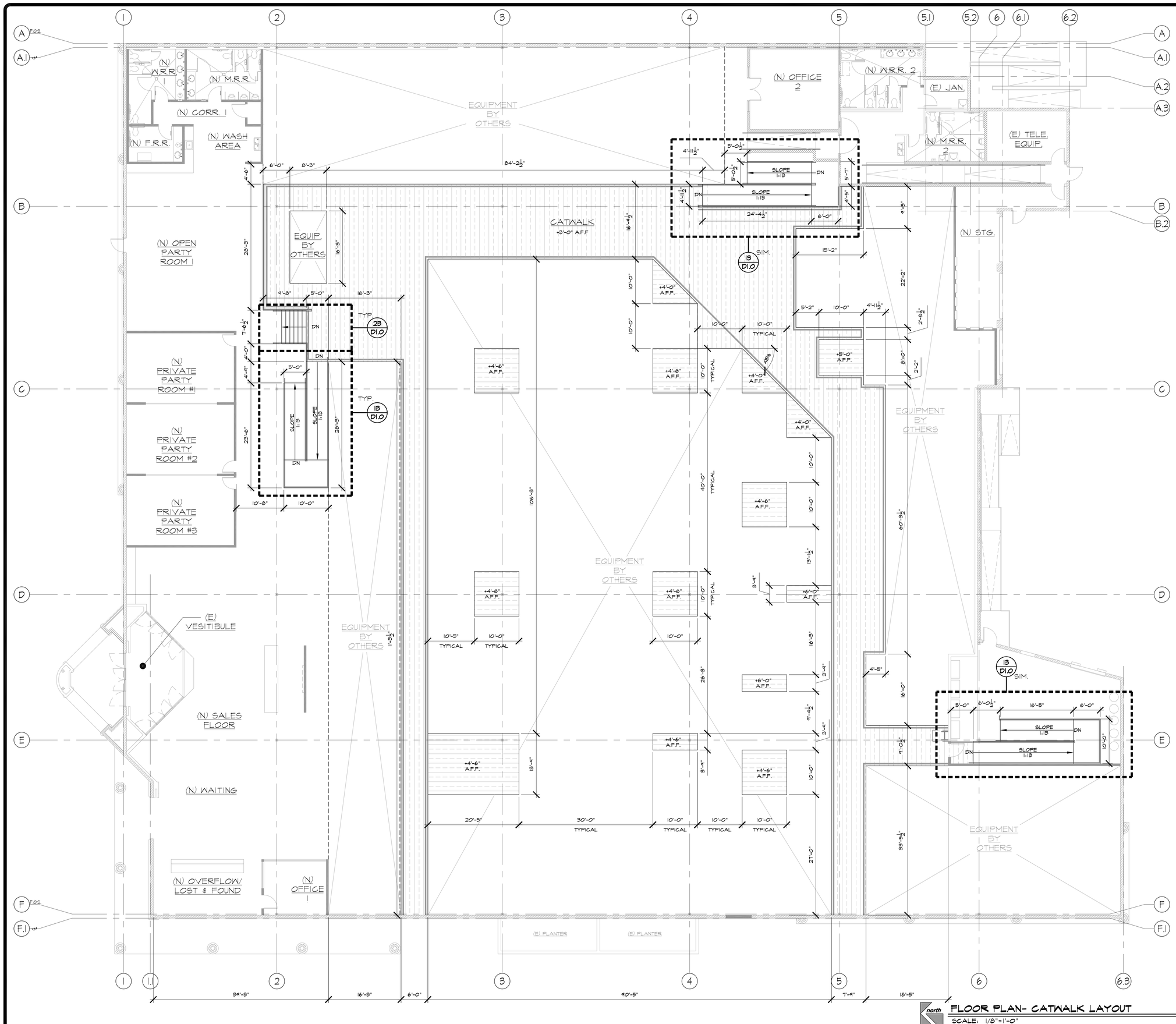

FLOOR PLAN- CATWALK LAYOUT

SCALE: 1/8"=1'-0"

THESE DRAWINGS AND SPECIFICATIONS ARE THE SOLE PROPERTY OF WHEELER & WHEELER ARCHITECTS, INC. AND SHALL NOT BE REPRODUCED WITHOUT WET STAMP AND SIGNATURE OF ARCHITECT OF RECORD. THESE DRAWINGS ARE NOT TO BE USED FOR ANY OTHER WORK, OR FOR LOCATION THEREOF, THAN THAT NOTED ON TITLE BLOCK. PLEASE CONTACT THE ARCHITECT OF RECORD AT 909.624.5095 IF ANY ATTEMPT IS MADE TO DO SO.

© 2011 WHEELER & WHEELER ARCHITECTS, INC.

NO.	DATE	REVISION
1	10.28.15	PLAN CHECK SUBMITTAL
2	12.14.15	PLAN CHECK REVISIONS

WHEELER & WHEELER

ARCHITECTS

ARCHITECTURE ■ INTERIORS ■ PLANNING
133 South Spring Street, Claremont, California 91711 909-624-5095 FAX 909-621-7757
PAUL B. WHEELER AIA REGISTERED ARCHITECT C17282 MARSHA M. WHEELER AIA REGISTERED ARCHITECT C14283

FLOOR PLAN- CATWALK LAYOUT

TENANT IMPROVEMENT & EXTERIOR FACADE IMPROVEMENTS for:

Get Air

S.E. Quadrant, Pomona 60 FWY at Corona Expressway
Pomona, California 91766

DATE	JOB NO.	DRAWN BY
03.04.15	AIR-2521	LMS

DRAWING NO. A1.1

APN NO. 8331-016-021

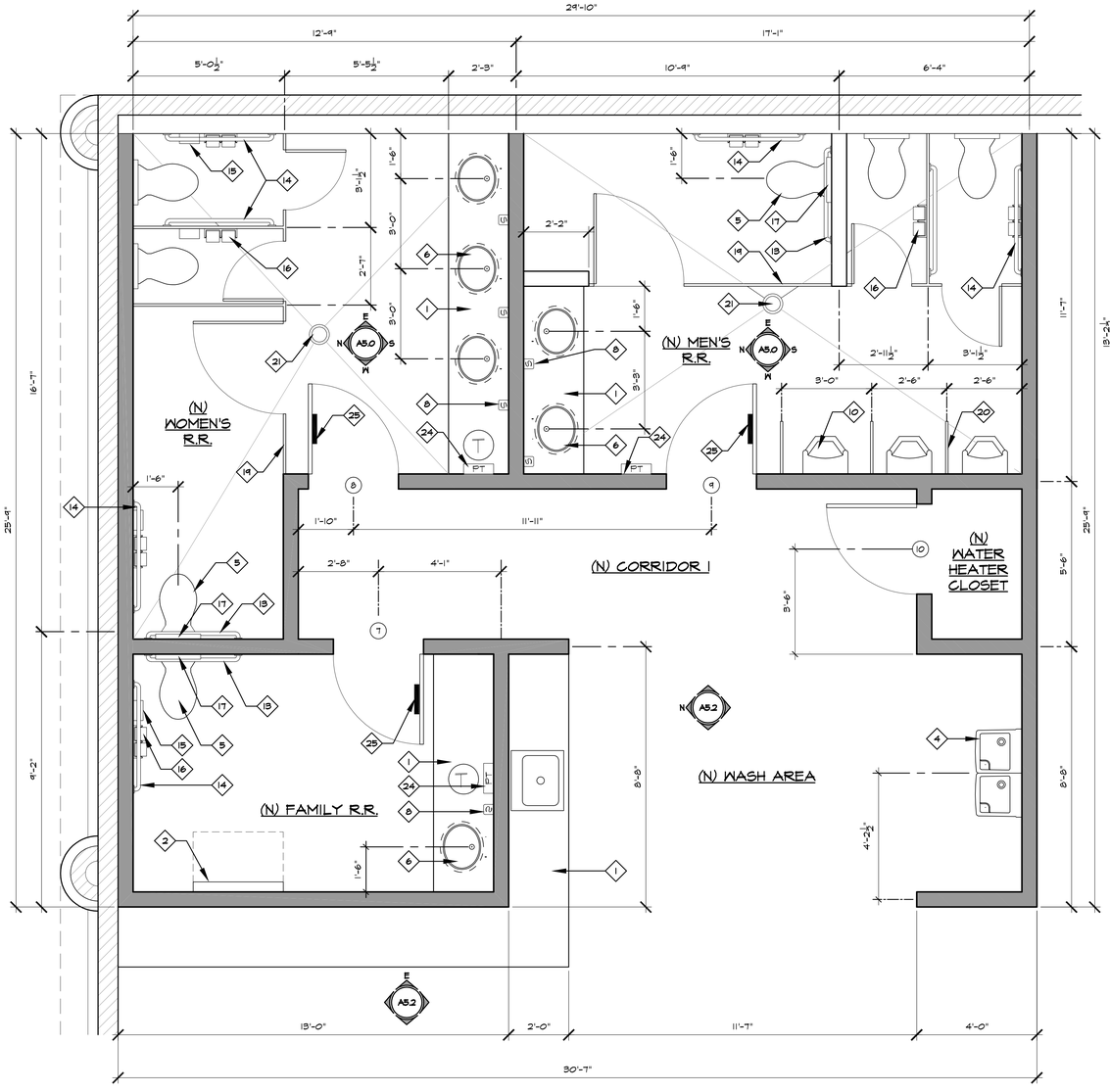

ENLARGED FLOOR PLAN (A)

SCALE: 1/2"=1'-0"

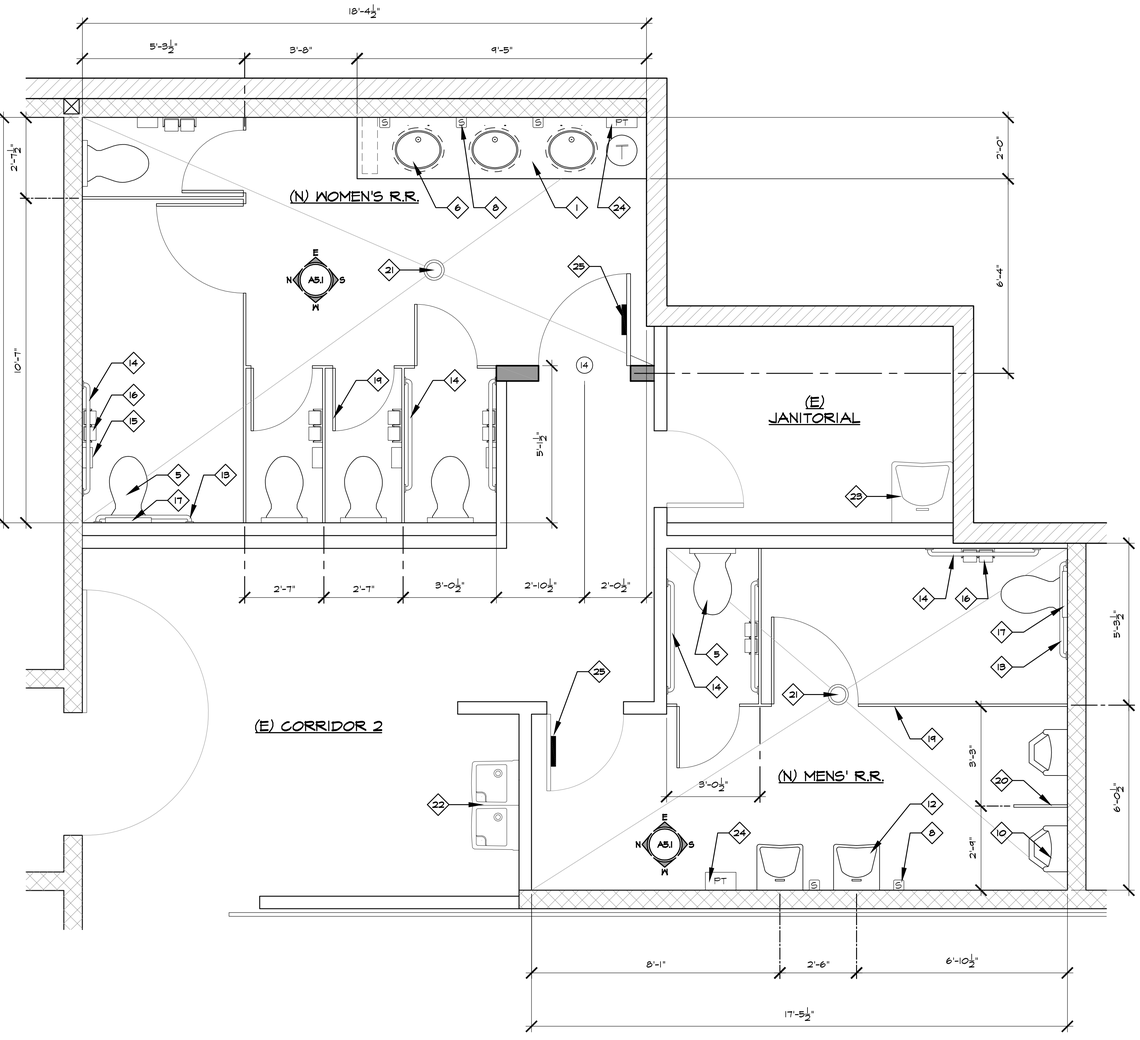

ENLARGED FLOOR PLAN (B)

SCALE: 1/2"=1'-0"

SYMBOLS LEGEND:

- (E) MASONRY WALL TO REMAIN, TYP.
- (E) 4" METAL STUD WALL TO REMAIN, TYP.
- (E) 2X WD. STUD WALL TO REMAIN, TYP.
- (N) 2X METAL STUD WALL, TYP. FOR DETAILS SEE:
  - 1 D1.0, 3 D1.0, 5 D1.0, 6 D1.0, 14 D1.0, 15 D1.0, 19 D1.0, 20 D1.0, 25 D1.0
- (N) 2 WD STUD WALL, 6 FT HEIGHT, TYP. FOR DETAILS, REFERENCE NEW WALL ABOVE.
- (N) TOILET PARTITION WALL, MANUFACTURER, FINISH & HARDWARE TBD BY OWNER, TYP.

KEY NOTES

1. (N) COUNTER TOP, FINISH & HARDWARE TBD BY OWNER, TYP.
2. (N) HORIZONTAL WALL MOUNTED BABY CHANGING STATION, KOALA KARE KB 110-SSWM, TYP.
3. (N) WALL MOUNTED TODLER SEAT, TYP.
4. (N) HIGH/LOW DRINKING FOUNTAIN, FOR DETAILED INFO, SEE PLUMBING DRAWINGS, TYP.
5. (N) FLOOR MOUNTED WATER CLOSET, FOR DETAILED INFO, SEE PLUMBING DRAWINGS, TYP.
6. (N) LAVATORY, FOR DETAILED INFO, SEE PLUMBING DRAWINGS, TYP.
7. ~~(N) RECESSED PAPER TOWEL DISPENSOR, TYP.~~ NOT USED
8. (N) SOAP DISPENSOR, TYP.
9. ~~(N) WALL MOUNTED COMBINATION PAPER TOWEL DISPENSOR AND TRASH COLLECTOR, TYP.~~ NOT USED
10. (N) WALL MOUNTED URINAL, SEE PLUMBING DRAWINGS FOR DETAILED INFO., TYP.
11. (N) WALL MOUNTED MOP SINK, SEE PLUMBING DRAWINGS FOR DETAILED INFO., TYP.
12. (N) WALL MOUNTED LAVATORY, SEE PLUMBING DRAWINGS FOR DETAILED INFO., TYP.
13. (N) 36" GRAB BAR, TYP. FOR DETAILS SEE SHEET ADA-2
14. (N) 42" GRAB BAR, TYP. FOR DETAILS SEE SHEET ADA-2
15. (N) SANITARY NAPKIN DISPOSAL BIN, TYP.
16. (N) WALL MOUNTED DOUBLE TOILET PAPER DISPENSOR, TYP.
17. (N) SANITARY SEAT COVER DISPENSOR, TYP.
18. ~~(N) RECESSED COMBINATION PAPER TOWEL DISPENSOR AND TRASH COLLECTOR, TYP.~~ NOT USED
19. (N) FLOOR MOUNTED TOILET PARTION, FINISH TBD BY OWNER, TYP.
20. (N) WALL MOUNTED PRIVACY SCREEN/ URINAL PARTION, FINISH TBD BY OWNER, TYP.
21. (N) FLOOR DRAIN, SEE PLUMBING DRAWINGS FOR DETAILED INFO., TYP.
22. (E) HIGH/ LOW DRINKING FOUNTAIN, FOR DETAILED INFO, SEE PLUMBING DRAWINGS, TYP.
23. ~~(E) WALL MOUNTED MOP SINK, TYP.~~ NOT USED
24. (N) WALL MOUNTED XELLERATOR XL- BW ECO HAND DRYER, TYP.
25. (N) TACTILE GEOMETRIC RESTROOM SIGN W/ ACCESIBILITY SIGN, TYP. FOR DETAILS SEE SHEET ADA-2
26. (N) COUNTER MOUNTED, ADA COMPLIANT, SIGNLE BOWL SINK, FOR DETAILED INFO. SEE PLUMBING DRAWINGS, TYP.
27. (N) WATER HEATER, FOR DETAILED INFO. SEE PLUMBING DRAWINGS, TYP.

NOTE
1.) ALL FLOOR & WALL FINISHES TDB BY OWNER, TYP.
2.) RESTROOM FLOOR FINISHES MUST BE A SMOOTH, HARD, NON-ABSORBENT SURFACE,TYP.
3.) RESTROOM WALLS MUST HAVE A SMOOTH, HARD, NON-ABSORBENT FINISH FROM FLOOR TO 48" A.F.F.,TYP.
4. FOR FINISHES, REFER TO SHEET A6.0.
5. FOR MOUNTING HEIGHTS, SEE SHEET AD-1 & ADA-2

THESE DRAWINGS AND SPECIFICATIONS ARE THE SOLE PROPERTY OF WHEELER & WHEELER ARCHITECTS, INC. AND SHALL NOT BE REPRODUCED WITHOUT WRITTEN PERMISSION FROM THE ARCHITECT OF RECORD. THESE DRAWINGS ARE NOT TO BE USED FOR ANY OTHER WORK, OR PORTION THEREOF, THAN THE WITHIN STRUCTURE. PLEASE CONTACT THE ARCHITECT OF RECORD AT 909.624.5085 IF ANY ATTEMPT IS MADE TO DO SO.
© 2011 WHEELER & WHEELER ARCHITECTS, INC.

NO.	DATE	REVISION
1	10.28.15	PLAN CHECK SUBMITTAL
2	12.14.15	PLAN CHECK REVISIONS

WHEELER & WHEELER
ARCHITECTS
ARCHITECTURE ■ INTERIORS ■ PLANNING
133 South Sycamore Street ■ Upland, California 91786 ■ Phone: 909-624-5085 ■ Fax: 909-920-821-7757
PAUL S. WHEELER AIA Architect C12185 SHARON M. WHEELER AIA Architect C14815

ENLARGED FLOOR PLANS

TENANT IMPROVEMENT & EXTERIOR FACADE IMPROVEMENTS for:

Get Air

S.E. Quadrant, Pomona 60 FWY at Corona Expressway
Pomona, California 91766

APN NO. 8331-016-021

DATE	JOB NO.	DRAWN BY
03.04.15	AIR-2521	LMS

DRAWING NO.
A1.2

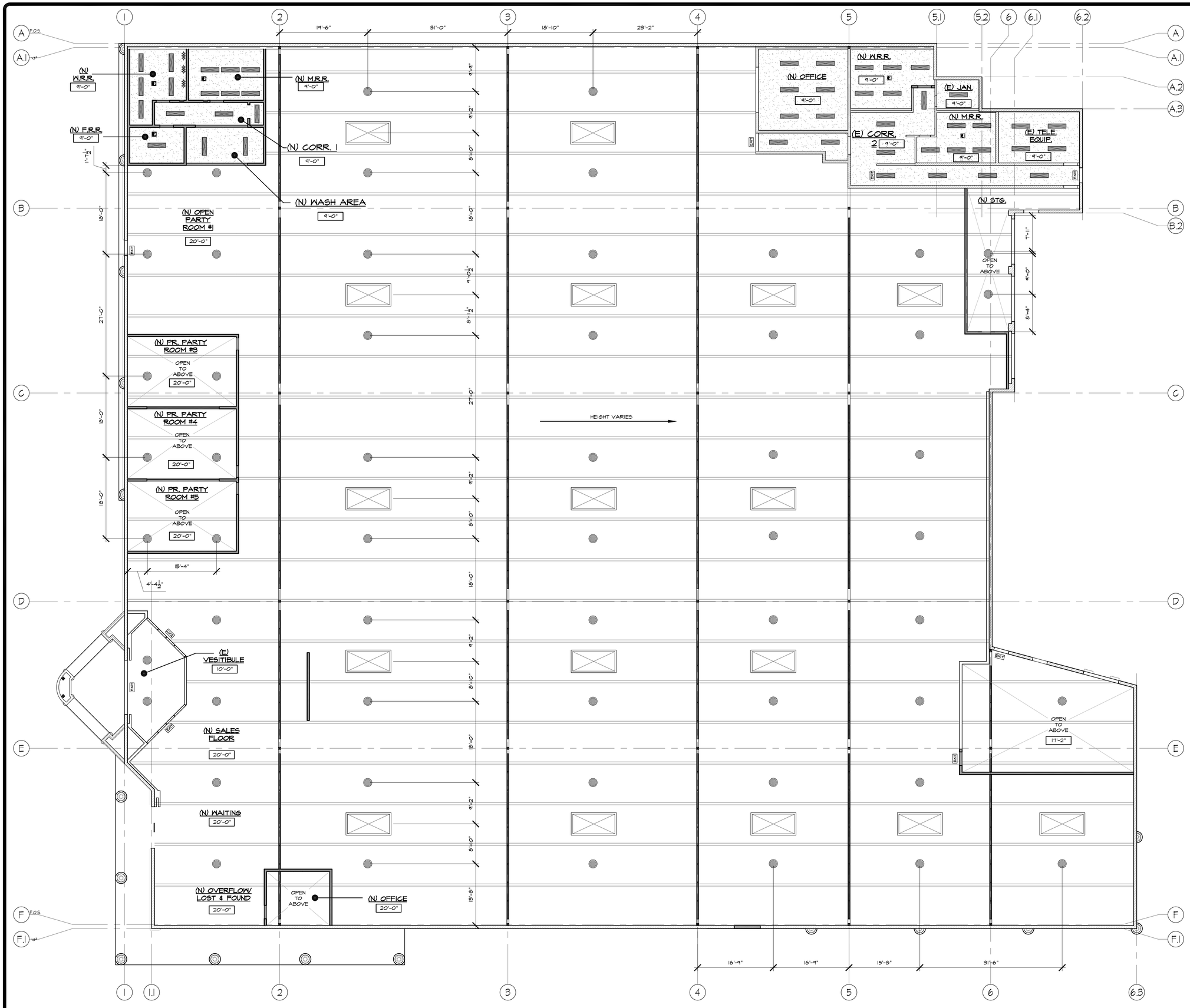

SYMBOLS LEGEND:

- (E) MASONRY WALL TO REMAIN, TYP.
- (E) 4" METAL STUD WALL TO REMAIN, TYP.
- (E) 2X WD. STUD WALL TO REMAIN, TYP.
- (N) 2X METAL STUD WALL, 11 FT HEIGHT, TYP. FOR DETAILS SEE:

1 D1.0 | 3 D1.0 | 5 D1.0 | 6 D1.0 | 14 D1.0
15 D1.0 | 19 D1.0 | 20 D1.0 | 25 D1.0

- (N) TOILET PARTITION, MANUFACTURER, MATERIAL, & HARDWARE TBD BY OWNER, TYP.
- (N) HARD-LID CEILING, 5/8" GYP. BOARD, LT. ORANGE PEEL FINISH, PAINT TBD BY OWNER, TYP.
- (N) 4 FT X 8 FT ACRALIGHT SINGLE DOME CURB MOUNTED SKYLIGHT OR APPROVED ALTERNATE, INSTALL PER MENUFACTURER INSTRUCTIONS, TYP.
- (N) 1 FT X 4 FT CEILING MOUNTED LIGHT FIXTURE, FOR DETAILED INFO. SEE ELECTRICAL DRAWINGS, TYP.
- (N) 4 FT. INDUSTRIAL STRIP CEILING MOUNTED LIGHT FIXTURE, FOR DETAILED INFO. SEE ELECTRICAL DRAWINGS, TYP.
- (N) 22 IN. HIGH BAY CEILING MOUNTED LIGHT FIXTURE, FOR DETAILED INFO. SEE ELECTRICAL DRAWINGS, TYP.
- (E) EXHAUST FAN, TO BE CHECKED FOR FUNCTION, MUST BE 50 CFM MIN. FOR DETAILED INFO. SEE ELECTRICAL DRAWINGS, TYP.
- (N) EXHAUST FAN, 50 CFM MIN., FOR DETAILED INFO. SEE ELECTRICAL DRAWINGS, TYP.
- EXIT (N) BACK LIT EXIT SIGN W/ BATTERY BACK UP, FOR DETAILED INFO, SEE ELECTRICAL DRAWINGS, TYP.

REFLECTED CEILING PLAN

SCALE: 1/8"=1'-0"

THESE DRAWINGS AND SPECIFICATIONS ARE THE SOLE PROPERTY OF WHEELER & WHEELER ARCHITECTS, INC. AND SHALL NOT BE REPRODUCED WITHOUT WET STAMP AND SIGNATURE OF ARCHITECT OF RECORD. THESE DRAWINGS AND SPECIFICATIONS NEED FOR ANY OTHER WORK, OR PORTION THEREOF, THAN THAT NOTED ON TITLE BLOCK, PLEASE CONTACT THE ARCHITECT OF RECORD AT 909.624.5095 IF ANY ATTEMPT IS MADE TO DO SO.

© 2011 WHEELER & WHEELER ARCHITECTS, INC.

NO.	DATE	REVISION
1	10.28.15	PLAN CHECK SUBMITTAL
2	12.14.15	PLAN CHECK REVISIONS

WHEELER & WHEELER
ARCHITECTS
ARCHITECTURE ■ INTERIORS ■ PLANNING
133 South Spring Street, Claremont, California 91711 909-624-5095 FAX 909-621-7757
PAUL R. WHEELER AIA REGISTERED ARCHITECT C17282 MARSHA M. WHEELER AIA REGISTERED ARCHITECT C14283

REFLECTED CEILING PLAN

TENANT IMPROVEMENT & EXTERIOR FACADE IMPROVEMENTS for:

Get Air

S.E. Quadrant, Pomona 60 FWY at Corona Expressway
Pomona, California 91766

DATE	JOB NO.	DRAWN BY
03.04.15	AIR-2521	LMS

DRAWING NO. A2.0

APN NO. 8331-016-021

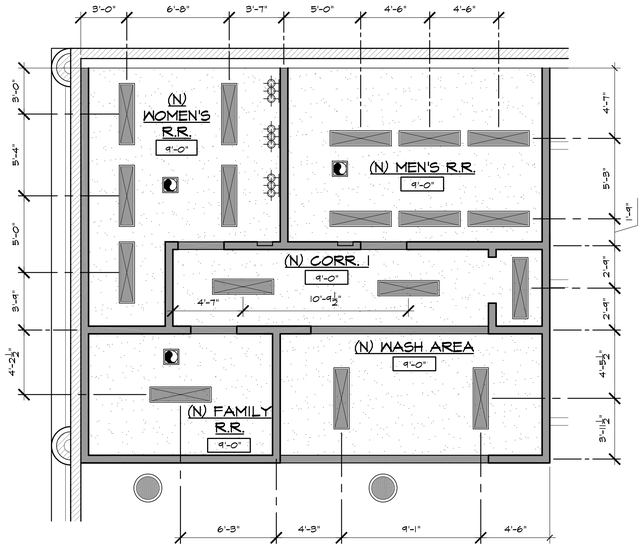

ENLARGED REFLECTED CEILING PLAN (A)

SCALE: 1/4"=1'-0"

SYMBOLS LEGEND:

- (E) MASONRY WALL TO REMAIN, TYP.
- (E) 4" METAL STUD WALL TO REMAIN, TYP.
- (E) 2X WD. STUD WALL TO REMAIN, TYP.
- (N) 2X METAL STUD WALL, 11 FT HEIGHT, TYP. FOR DETAILS SEE:
- 1 D1.0 / 3 D1.0 / 5 D1.0 / 6 D1.0 / 14 D1.0 / 15 D1.0 / 19 D1.0 / 20 D1.0 / 25 D1.0
- (N) TOILET PARTITION WALL, MANUFACTURER, FINISH & HARDWARE TBD BY OWNER, TYP.
- (N) HARD-LID CEILING, 5/8" GYP. BOARD, L.T. ORANGE PEEL FINISH, PAINT TBD BY OWNER, TYP. USE GREEN BOARD AS DICTATED BY FINISH SCHEDULE ON SHEET A6.0.
- (N) 1 FT X 4 FT CEILING MOUNTED LIGHT FIXTURE, FOR MORE INFO. SEE ELECTRICAL DRAWINGS, TYP.
- (N) 4 FT. INDUSTRIAL STRIP CEILING MOUNTED LIGHT FIXTURE, FOR MORE INFO. SEE ELECTRICAL DRAWINGS, TYP.
- (N) 22 IN. HIGH BAY CEILING MOUNTED LIGHT FIXTURE, FOR MORE INFO SEE ELECTRICAL DRAWINGS, TYP.
- (E) EXHAUST FAN, TO BE CHECKED FOR FUNCTION, MUST BE 50 CFM MIN. FOR MORE INFO SEE MECHANICAL DRAWINGS, TYP.
- (N) EXHAUST FAN, 50 CFM MIN. FOR MORE INFO. SEE MECHANICAL DRAWINGS, TYP.
- EXIT (N) BACK LIT EXIT SIGN W/ BATTERY BACK UP, FOR MORE INFO. SEE ELECTRICAL DRAWINGS, TYP.

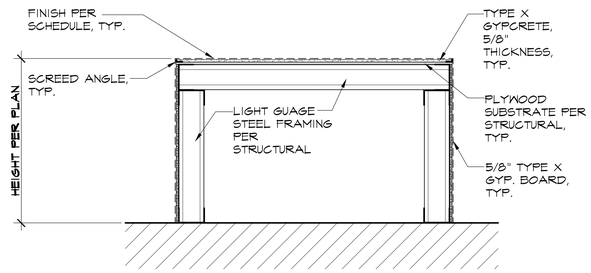

SCALE: 3/4"=1'-0"

PLATFORM SECTION 1

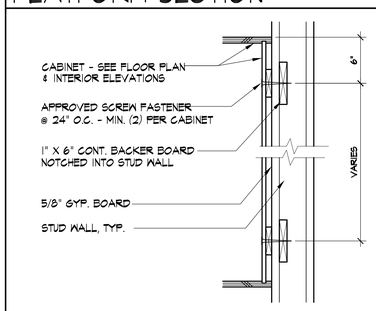

SCALE: 1 1/2"=1'-0"

BACK'G PLATE DETAIL 7

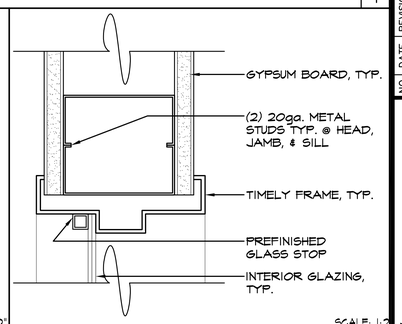

SCALE: 1:2

INTERIOR WINDOW 2

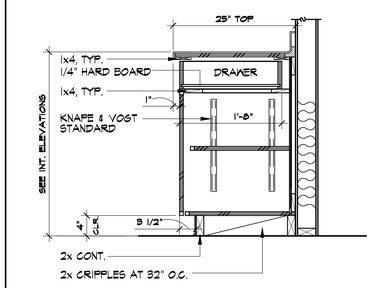

SCALE: 1"=1'-0"

CABINET SECTION 8

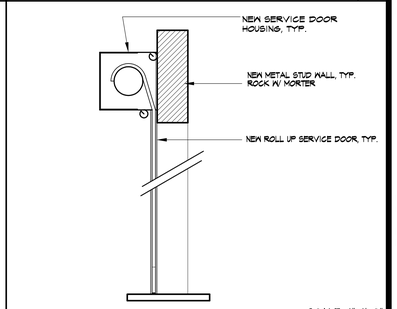

SCALE: 1"=1'-0"

FACEMOUNT ROLL UP DR. 3

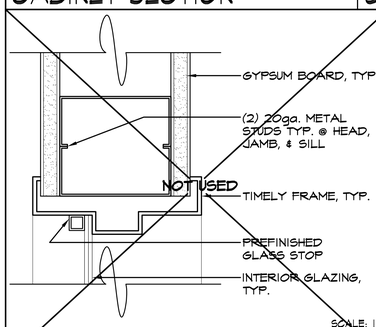

SCALE: 1:2

INTERIOR WINDOW 9

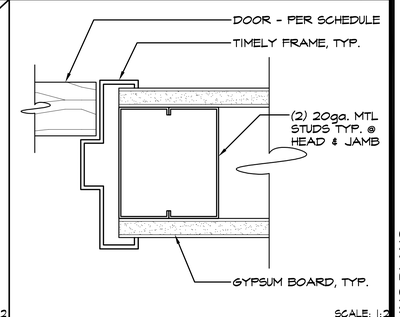

SCALE: 1:2

DOOR HEAD/JAMB 4

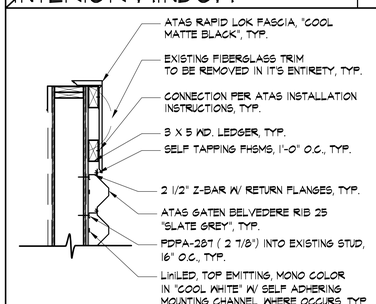

SCALE: 3/4"=1'-0"

MTL PANEL ATTACHMENT 10

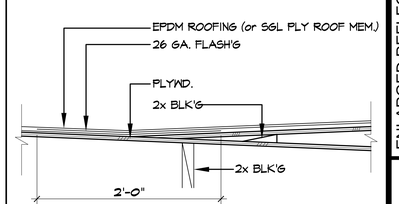

SCALE: 1 1/2"=1'-0"

CRICKET 5

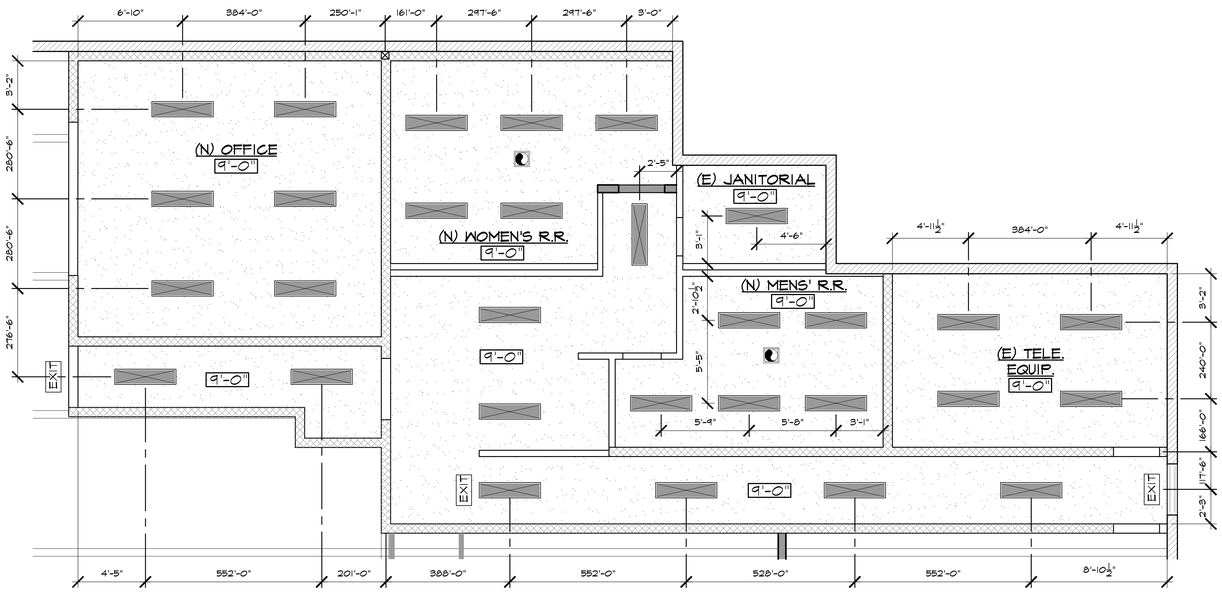

ENLARGED REFLECTED CEILING PLAN (B)

SCALE: 1/4"=1'-0"

THESE DRAWINGS AND SPECIFICATIONS ARE THE SOLE PROPERTY OF WHEELER & WHEELER ARCHITECTS, INC. AND SHALL NOT BE REPRODUCED WITHOUT WET STAMP AND SIGNATURE OF ARCHITECT OF RECORD. THESE DRAWINGS ARE NOT TO BE USED FOR ANY OTHER WORK, OR PORTION THEREOF, THAN THAT NOTED ON TITLE BLOCK. PLEASE STRIKE THE ENTIRE TITLE BLOCK AT 405 624 5095 IF ANY ATTEMPT IS MADE TO DO SO

© 2011 WHEELER & WHEELER ARCHITECTS, INC.

NO.	DATE	REVISION
1	10.28.15	PLAN CHECK SUBMITTAL
2	12.14.15	PLAN CHECK REVISIONS

WHEELER & WHEELER
ARCHITECTS
ARCHITECTURE ■ INTERIORS ■ PLANNING
133 South Spring Street, Claremont, California 91711 909-624-5095 FAX 909-621-7757
PAUL R. WHEELER AIA REGISTERED ARCHITECT C17282 MARSHA M. WHEELER AIA REGISTERED ARCHITECT C21283

ENLARGED REFLECTED CEILING PLANS

TENANT IMPROVEMENT & EXTERIOR FACADE IMPROVEMENTS for:

Get Air

S.E. Quadrant, Pomona 60 FWY at Corona Expressway

Pomona, California 91766

APN NO. 8331-016-021

DATE	JOB NO.	DRAWN BY
03.04.15	AIR-2521	LMS

DRAWING NO. A2.1

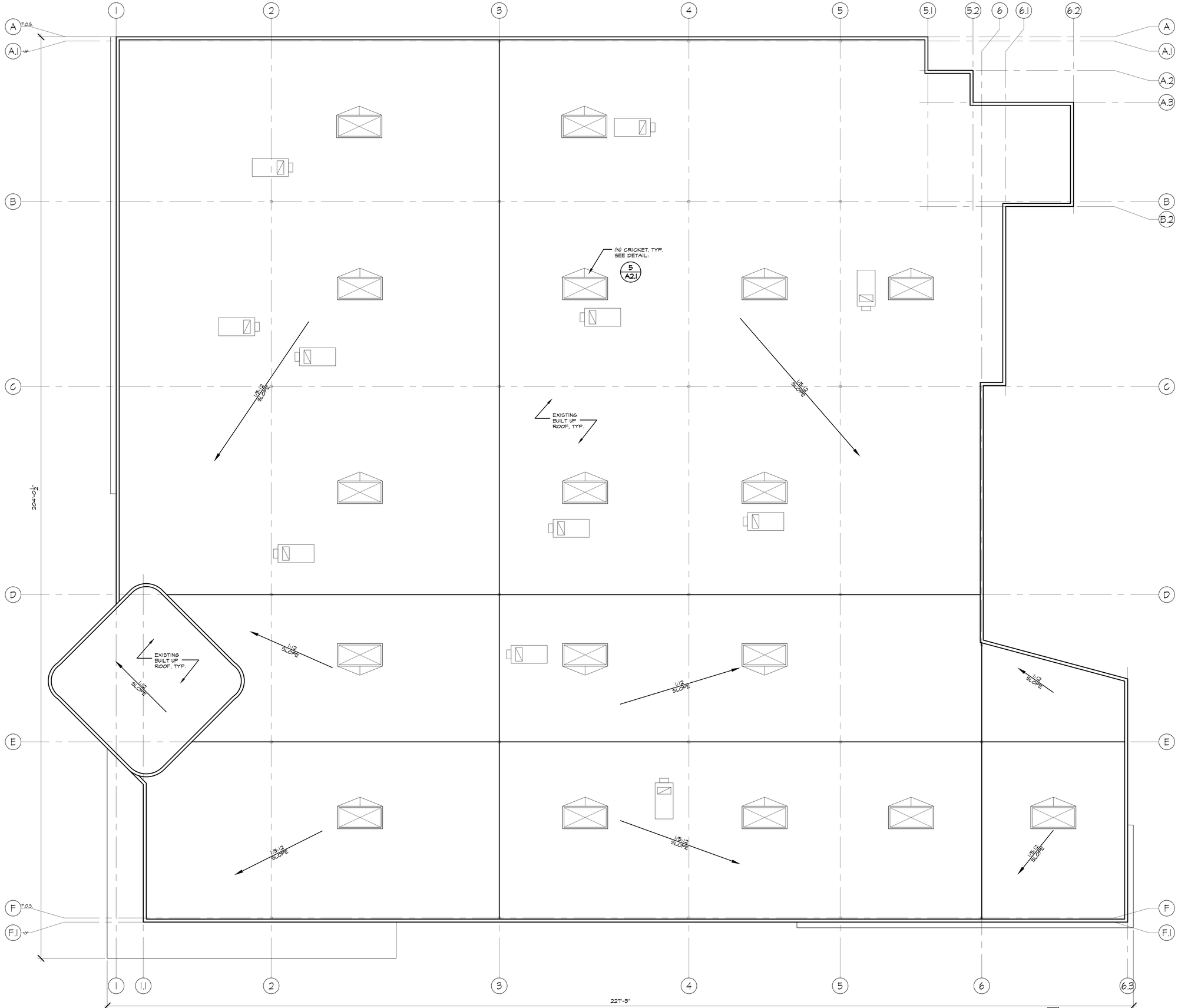

SYMBOLS LEGEND:

(E) PARAPET WALL, TYP

(N) 4FT. X 8 FT. ACRALIGHT SINGLE DOME CURB MOUNTED SKYLIGHT OR APPROVED ALTERNATE. INSTALL PER MANUFACTURER INSTRUCTIONS, TYP. FOR LOCATIONS, SEE SHEET A2.0

(E) HVAC SYSTEM, FOR DETAILED INFO. SEE MECHANICAL DRAWINGS, TYP.

NOTE
1.) PATCH AND REPAIR ALL DAMAGED ROOFING MATERIAL IN KIND UNLESS OTHERWISE NOTED, TYP.

ROOF PLAN
SCALE: 1/8"=1'-0"

THESE DRAWINGS AND SPECIFICATIONS ARE THE SOLE PROPERTY OF WHEELER & WHEELER ARCHITECTS, INC. AND SHALL NOT BE REPRODUCED WITHOUT WET STAMP AND SIGNATURE OF ARCHITECT OF RECORD. THESE DRAWINGS AND SPECIFICATIONS NEED FOR ANY OTHER WORK, OR PORTION THEREOF, THAN THAT NOTED ON TITLE BLOCK, PLACE OTHER THAN THE SITE NOTED, OR AT ANY TIME IS STRICTLY PROHIBITED. ©2011 WHEELER & WHEELER ARCHITECTS, INC.

NO.	DATE	REVISION
1	10.28.15	PLAN CHECK SUBMITTAL
2	12.14.15	PLAN CHECK REVISIONS

WHEELER & WHEELER
ARCHITECTS
ARCHITECTURE ■ INTERIORS ■ PLANNING
133 South Spring Street, Claremont, California 91711 909-624-5095 FAX 909-621-7757
PAUL R. WHEELER AIA REGISTERED ARCHITECT C17282 MARSHA M. WHEELER AIA REGISTERED ARCHITECT C21893

ROOF PLAN

TENANT IMPROVEMENT & EXTERIOR FACADE IMPROVEMENTS for:
Get Air
S.E. Quadrant, Pomona 60 FWY at Corona Expressway
Pomona, California 91766

DATE	JOB NO.	DRAWN BY
09.04.15	AIR-2521	LMS

DRAWING NO. A3.0

APN NO. 8331-016-021

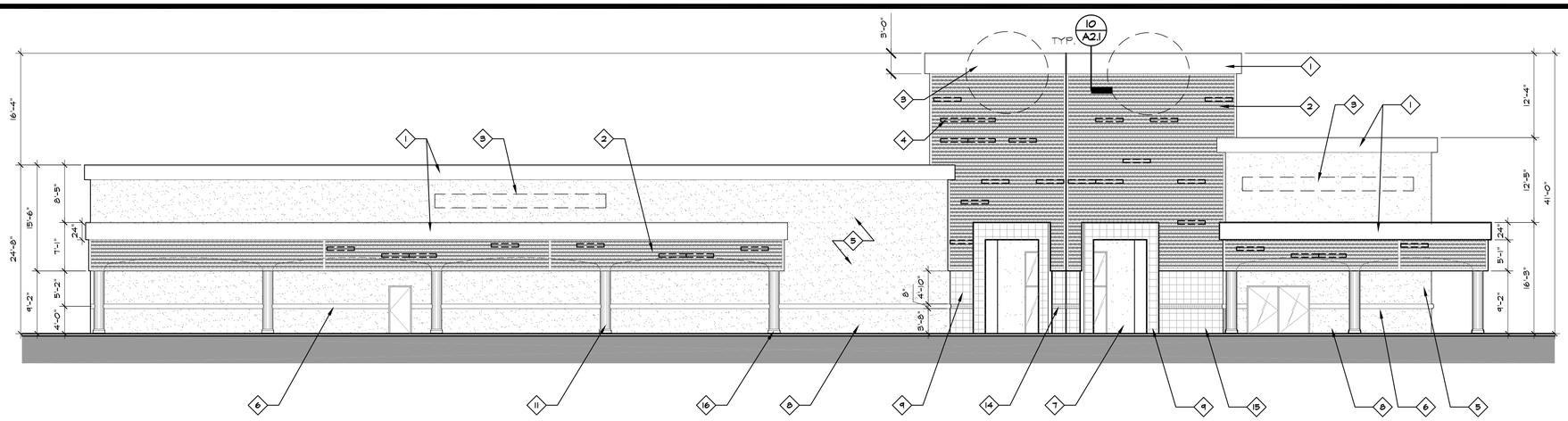

NEW NORTH ELEVATION

SCALE: 1/4"=1'-0"

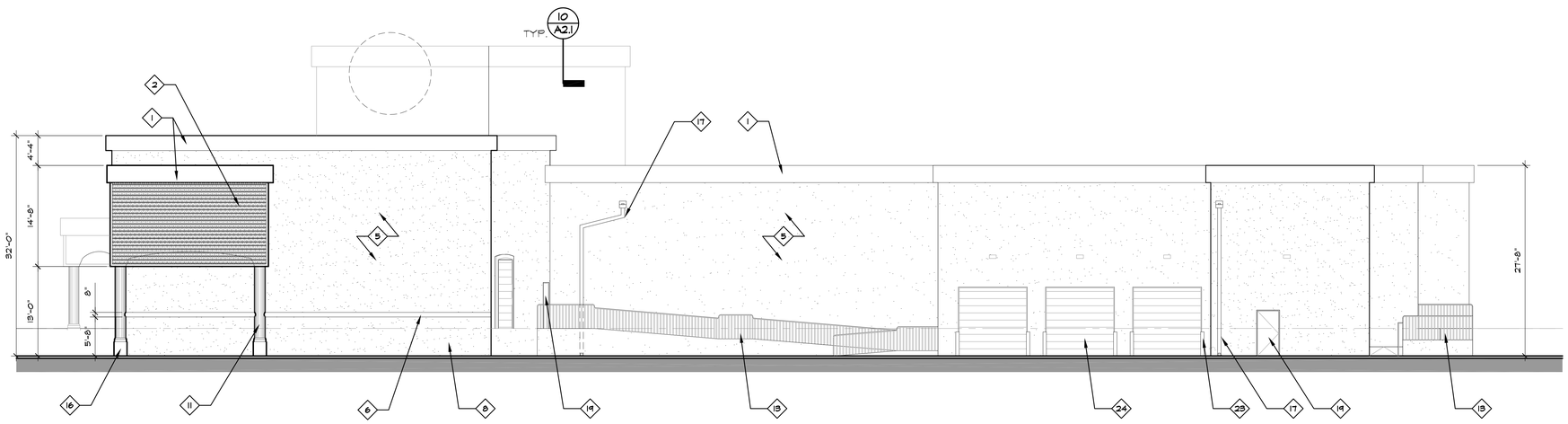

NEW SOUTH ELEVATION

SCALE: 1/4"=1'-0"

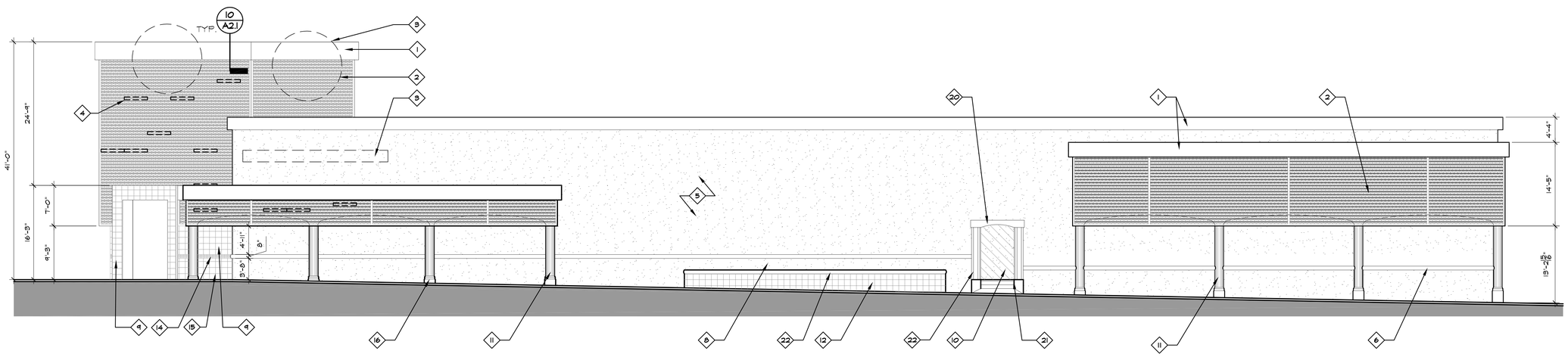

NEW WEST ELEVATION

SCALE: 1/4"=1'-0"

KEY NOTES

1. (N) ATAS RAPID LOK FASCIA, "COOL MATTE BLACK", INSTALL PER MANUFACTURER INSTRUCTIONS, TYP.
2. (N) ATATS GATEN BELVEDERE RIB A25, EXPOSED FASTENER, "SLATE GREY", INSTALL PER MANUFACTURER INSTRUCTIONS, PAINT EXISTING TILE BEYOND SHERWIN WILLIAMS SW 6422, "OUTRAGEOUS GREEN" WHERE OCCURS, TYP.
3. (N) SIGNAGE BY OTHERS, TYP.
4. (N) LINILED TOP-EMITTING, MONO COLOR LED STRIP LIGHT, "COOL WHITE", W/ SELF MOUNTING CHANNEL, DOUBLE ROW, CUT TO 4'-0" LENGTHS, TYP OF (34).
5. (E) STUCCO, PATCH AND REPAIR AS NEEDED, PAINT SHERWIN WILLIAMS SW 6127 "IVOIRE", TYP.
6. (E) FIBER GLASS TRIM, PATCH AND REPAIR AS NEEDED, PAINT SHERWIN WILLIAMS SW 6907, "FORSYNTHIA", TYP.
7. (E) STUCCO, PATCH AND REPAIR AS NEEDED, PAINT SHERWIN WILLIAMS SW 6907, "FORSYNTHIA", TYP.
8. (E) STUCCO, PATCH AND REPAIR AS NEEDED, PAINT SHERWIN WILLIAMS SW 6422, "OUTRAGEOUS GREEN", TYP.
9. (N) DALTILE, 6X6 Q140, "CITRIC BLOOM", SEMI-GLOSS, TYP. REMOVE EXITING TILE AND REPLACE W/ NEW WHERE OCCURS, TYP.
10. (N) WALL TO BE INFILLED, STUCCO FINISH TO MATCH EXISTING, PAINT SHERWIN WILLIAMS SW 6127, "IVOIRE", TYP.
11. (E) COLUMN WRAP, FILL EXPOSED SEAMS AS NEEDED, PAINT SHERWIN WILLIMAS SW 7000, "IBIS WHITE", TYP.
12. (E) TILE, REPAIR AS NEEDED, TYP.
13. (E) GUARDRAIL, PAINT SHERWIN WILLIAMS SW 6422 " OUTRAGEOUS GREEN", TYP.
14. (N) DALTILE, 6X6 DH 50, "SUNFLOWER", SEMI-GLOSS, TYP. REMOVE EXITING TILE AND REPLACE W/ NEW WHERE OCCURS, TYP.
15. (N) DALTILE, 6X6 K165, "ALMOND", SEMI-GLOSS, TYP. REMOVE EXITING TILE AND REPLACE W/ NEW WHERE OCCURS, TYP.
16. (E) COLUMN BASE, REPAIR AS NEEDED, PAINT SHERWIN WILLIAMS SW 6991, "BLACK MAGIC", TYP.
17. (E) DOWNSPOUT, REPAIR AND REPLACE AS NEEDED, PAINT SHERWIN WILLIAMS SW 6127, "IVOIRE", TYP.
18. (E) EXTERIOR WALL MOUNTED LIGHT FIXTURE, REPAIR AND REPLACE IN KIND AS NEEDED, TYP.
19. (E) METAL DOOR, PAINT SHERWIN WILLIAMS SW 6127, "IVOIRE", TYP.
20. (E) LINTEL, PAINT SHERWIN WILLIAMS SW 6127, "IVOIRE", TYP.
21. (E) CONCRETE STAIR, PAINT SHERWIN WILLIAMS SW 6127, "IVOIRE", TYP.
22. (E) FIBER GLASS TRIM, PAINT SHERWIN WILLIAMS SW 7000, "IBIS WHITE", TYP.
23. (E) BOLLARD, PAINT SHERWIN WILLIAMS SW 6601, "TANAGER". ADD REFLECTIVE 2" WHITE TAPE TO TOP OF BOLLARD, NO MORE THAN 1" FROM TOP, TYP.
24. (E) SERGIVE DOOR, PROTECT IN PLACE, CLEAN, TYP.

NOTE
1.) SHOP DRAWING SUBMITTALS REQUIRED FOR ALL METAL PANELING AND FASCIA.

THESE DRAWINGS AND SPECIFICATIONS ARE THE SOLE PROPERTY OF WHEELER & WHEELER ARCHITECTS, INC. AND SHALL NOT BE REPRODUCED WITHOUT WET STAMP AND SIGNATURE OF ARCHITECT OF RECORD. THESE DRAWINGS AND SPECIFICATIONS NEED FOR ANY OTHER WORK, OR PORTION THEREOF, THAN THAT NOTED ON TITLE BLOCK, IS EXPRESSLY PROHIBITED WITHOUT WRITTEN CONSENT. 405.624.5095 IF ANY ATTEMPT IS MADE TO DO SO

© 2011 WHEELER & WHEELER ARCHITECTS, INC.

NO.	DATE	REVISION
1	10.28.15	PLAN CHECK SUBMITTAL
2	12.14.15	PLAN CHECK REVISIONS

WHEELER & WHEELER
ARCHITECTS
ARCHITECTURE ■ INTERIORS ■ PLANNING
133 South Spring Street, Claremont, California 91711 909-624-5095 FAX 909-621-7757
PAUL R. WHEELER AIA LICENSE C17280 MARSHA A. WHEELER AIA LICENSE C14283

EXTERIOR ELEVATIONS

TENANT IMPROVEMENT & EXTERIOR FACADE IMPROVEMENTS for:

Get Air

S.E. Quadrant, Pomona 60 FWY at Corona Expressway
Pomona, California 91766

DATE	JOB NO.	DRAWN BY
03.04.15	AIR-2521	LMS

DRAWING NO.
A4.0

APN NO. 8331-016-021

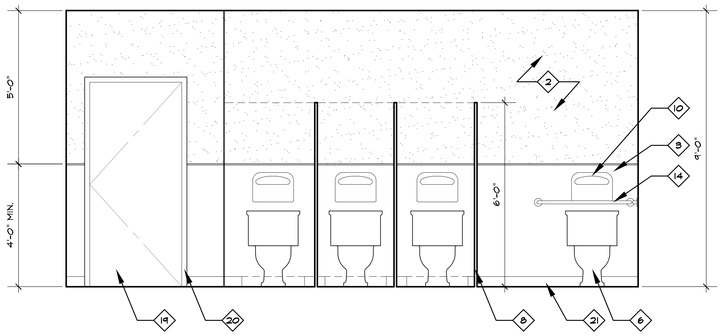

W 2 NEW WOMEN'S RESTROOM

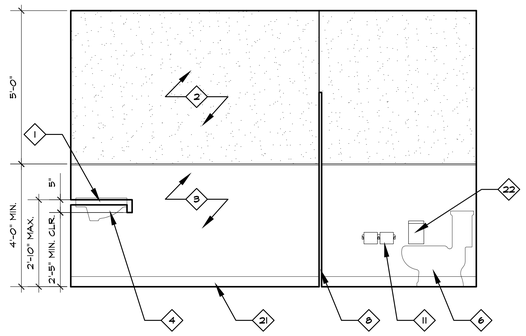

S 2 NEW WOMEN'S RESTROOM

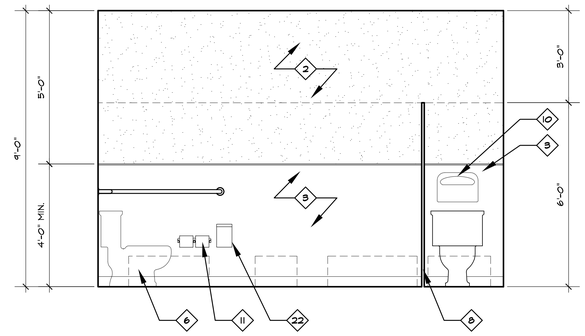

N 2 NEW WOMEN'S RESTROOM

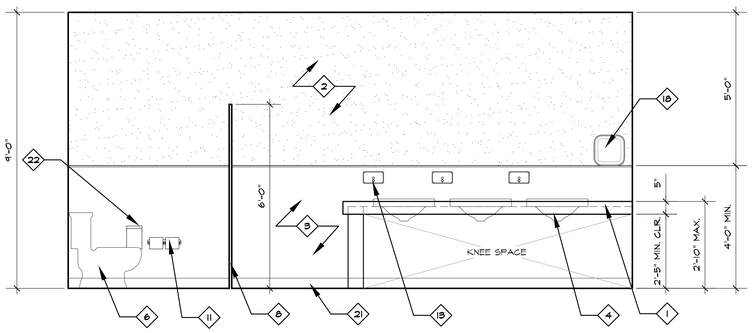

2 E NEW WOMEN'S RESTROOM

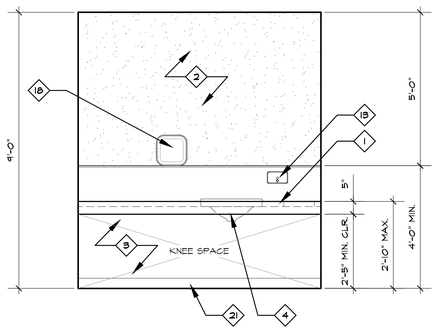

N - NEW FAMILY RESTROOM

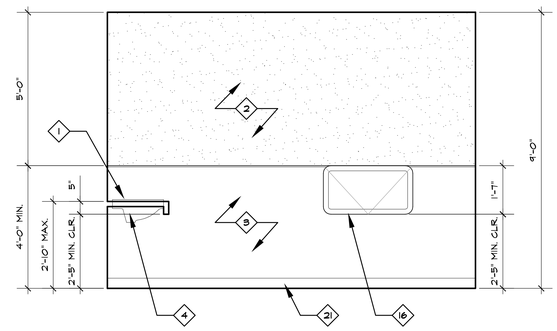

- E NEW FAMILY RESTROOM

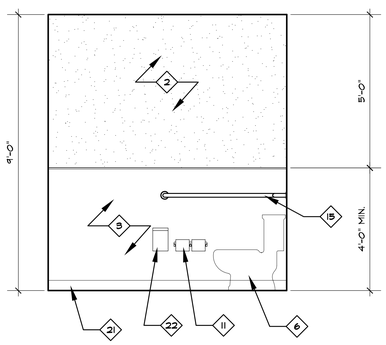

S - NEW FAMILY RESTROOM

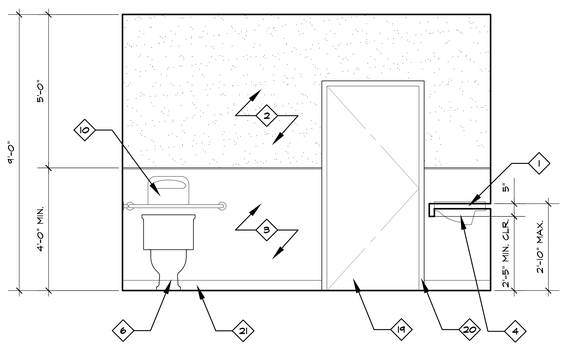

W - NEW FAMILY RESTROOM

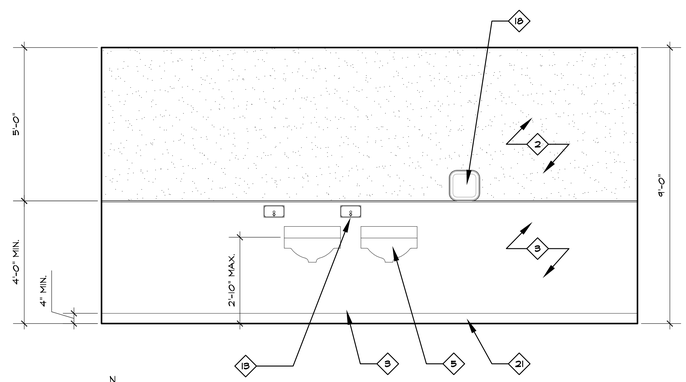

N 2 NEW MEN'S RESTRROM

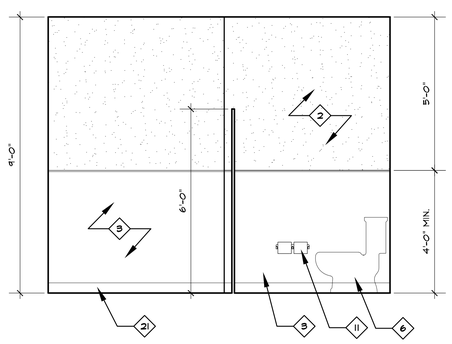

2 E NEW MEN'S RESTROOM

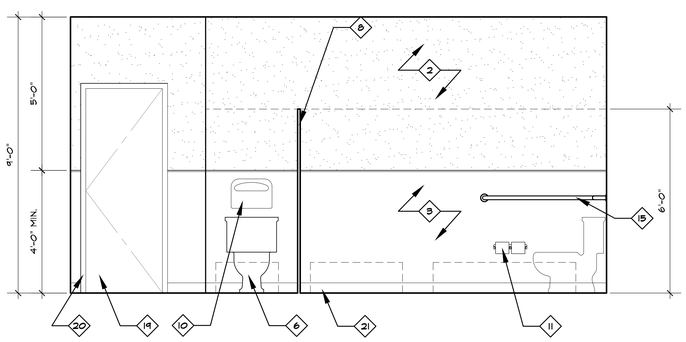

N 2 NEW MEN'S RESTROOM

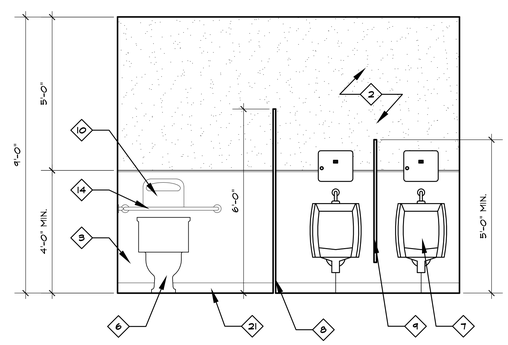

W 2 NEW MEN'S RESTROOM

KEYNOTES:

1. (N) COUNTER TOP, FORMICA LAMINATE, COLOR TBD BY OWNER, TYP.
2. (N) 5/8" GREEN BOARD W/ LT ORANGE PEEL FINISH, PAINT TBD BY OWNER, TYP.
3. (N) WHITE FRP W/ 1/2" TRIM PIECE, TYP.
4. (N) LAVATORY W/ BURN SOCK, FOR DETAILED INFO. SEE PLUMBING DRAWINGS, TYP.
5. (N) WALL MOUNTED LAVATORY W/ BURN SOCK, FOR DETAILED INFO. SEE PLUMBING DRAWINGS, TYP.
6. (N) FLOOR MOUNTED WATER CLOSET, FOR DETAILED INFO. SEE PLUMBING DRAWINGS, TYP.
7. (N) URINAL, FOR DETAILED INFO, SEE PLUMBING DRAWINGS, TYP.
8. (N) METAL TOILET PARTION, WHITE, HARDWARE & HANGING TYPE TBD BY OWNER, TYP.
9. (N) METAL URINAL PARTION, WHITE, HARDWARE TBD BY OWNER, TYP.
10. (N) PLASTIC SANITARY SEAT COVER DISPENSOR, WHITE, TYP.
11. (N) TOILET PAPER DISPENSOR, TYP.
12. ~~(N) PAPER TOWEL DISPENSOR, MANFUACTURER TBD BY OWNER, TYP.~~ NOT USED
13. (N) PLASTIC SOAP DISPENSOR, WHITE, TYP.
14. (N) 36" GRAB BAR, INSTALL BLOCKING PER SHEET ADA-1 & 2, TYP.
15. (N) 46" GRAB BAR INSTALL BLOCKING PER SHEET ADA-1 & 2, TYP.
16. (N) HORIZONTAL WALL MOUNTED BABY CHANGING STATION, KOALA KARE KB 110-SSWM, TYP.
17. ~~(N) WALL MOUNTED TODLER SAFETY SEAT, TYP.~~ NOT USED
18. (N) XLERATOR XL-BW ECOB HAND DRYER, WHITE, TYP.
19. (N) WD. DOOR, PAINT TBD BY OWNER, TYP.
20. (N) WD. TRIM, PAINT TBD BY OWNER, TYP.
21. (N) 4" RUBBER TOPSET BASE, MANUFACTURER & COLOR TBD BY OWNER, TYP.
22. (N) SANITARY NAPKIN DISPOSAL BIN, PLASTIC, WHITE, TYP.

NOTE
1.) FOR MOUNTING HEIGHTS AND INFORMATION, SEE SHEETS ADA-1 & ADA-2

THESE DRAWINGS AND SPECIFICATIONS ARE THE SOLE PROPERTY OF WHEELER & WHEELER ARCHITECTS, INC. AND SHALL NOT BE REPRODUCED WITHOUT WET STAMP AND SIGNATURE OF ARCHITECT OF RECORD. THESE DRAWINGS AND SPECIFICATIONS NOT TO BE USED FOR ANY OTHER WORK, OR PORTION THEREOF, THAN THAT NOTED ON TITLE BLOCK. PLEASE CONTACT THE ARCHITECT OF RECORD AT 405.624.5095 IF ANY ATTEMPT IS MADE TO DO SO

© 2011 WHEELER & WHEELER ARCHITECTS, INC.

NO.	DATE	REVISION
1	10.28.15	PLAN CHECK SUBMITTAL
2	12.14.15	PLAN CHECK REVISIONS

WHEELER & WHEELER
ARCHITECTS
ARCHITECTURE ■ INTERIORS ■ PLANNING
133 South Spring Street, Claremont, California 91711 909-624-5095 FAX 909-621-7757
PAUL R. WHEELER AIA REGISTERED ARCHITECT C17282 MARSHA M. WHEELER AIA REGISTERED ARCHITECT C21893

INTERIOR ELEVATIONS

TENANT IMPROVEMENT & EXTERIOR FACADE IMPROVEMENTS for:

Get Air

S.E. Quadrant, Pomona 60 FWY at Corona Expressway
Pomona, California 91766

APN NO. 8331-016-021

DATE	JOB NO.	DRAWN BY
03.04.15	AIR-2521	LMS

DRAWING NO.
A5.0

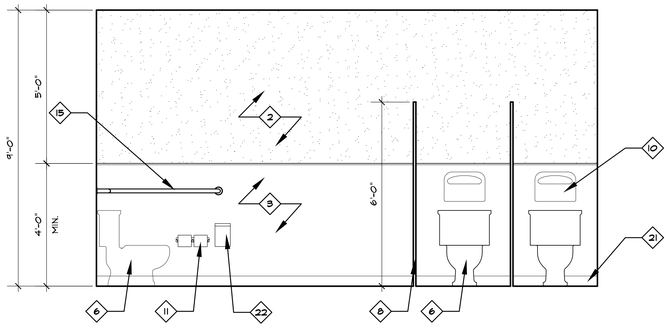

N 1 NEW WOMEN'S RESTROOM

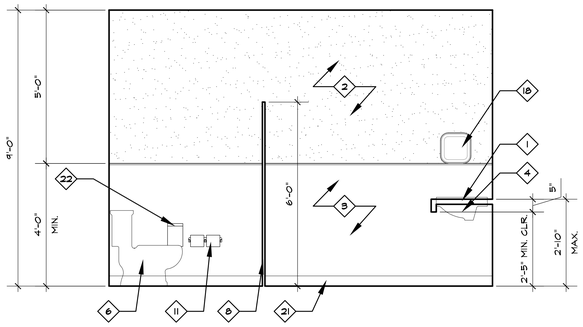

1 E NEW WOMEN'S RESTROOM

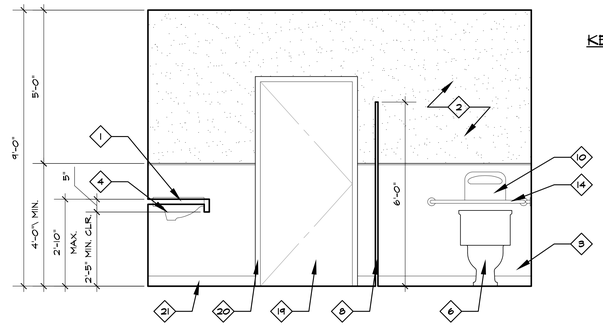

1 S NEW WOMEN'S RESTROOM

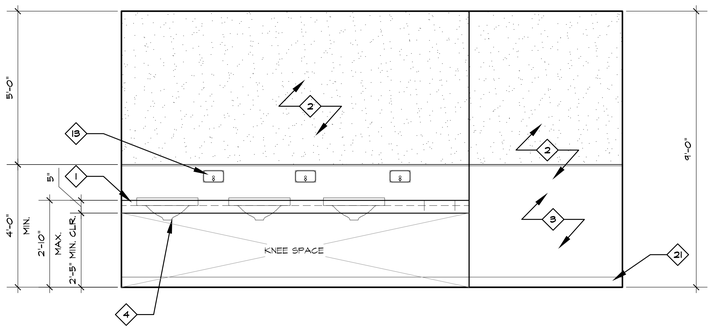

W 1 NEW WOMEN'S RESTROOM

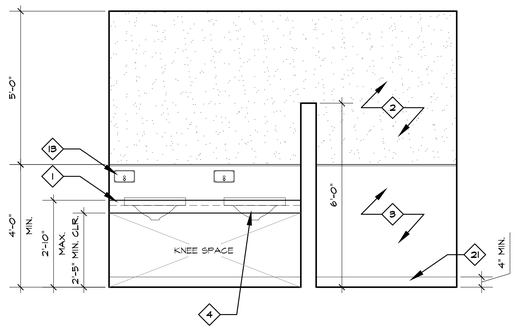

N 1 NEW MEN'S RESTROOM

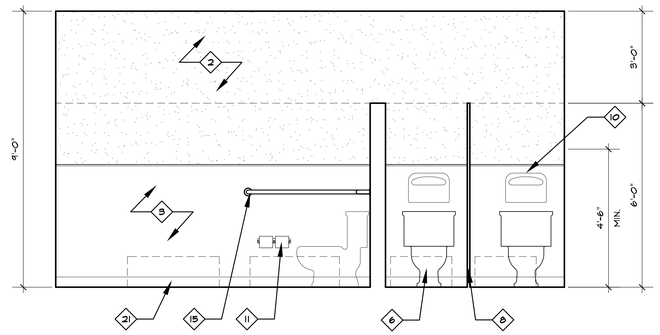

1 E NEW MEN'S RESTROOM

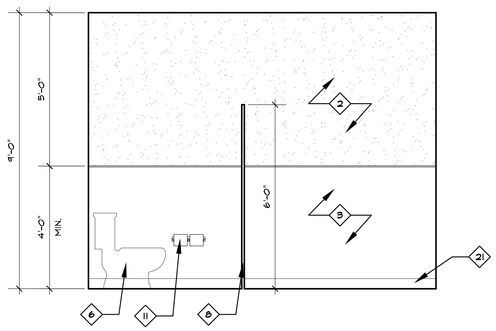

1 S NEW MEN'S RESTROOM

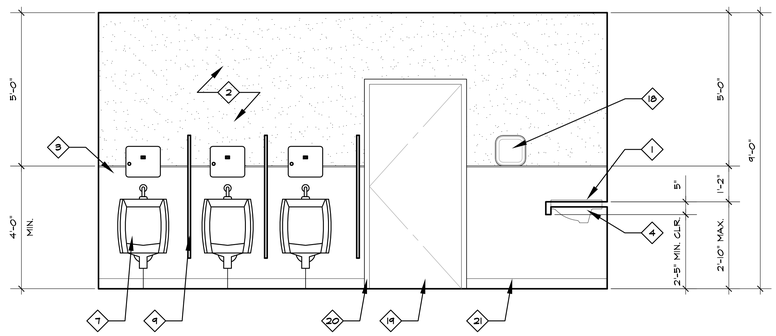

W - NEW MEN'S RESTROOM

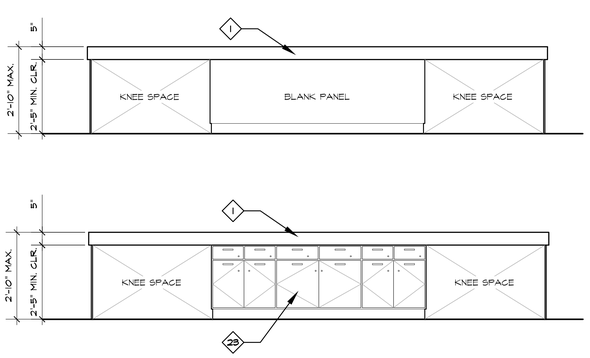

- FRONT DESK CABINETRY

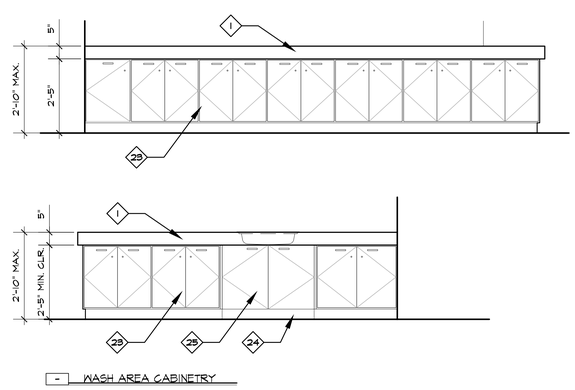

- WASH AREA CABINETRY

KEYNOTES:

1. (N) COUNTER TOP, FORMICA LAMINATE, COLOR TBD BY OWNER, TYP.
2. (N) 5/8" GREEN BOARD W/ LT ORANGE PEEL FINISH, PAINT TBD BY OWNER, TYP.
3. (N) WHITE FRP W/ 1/2" TRIM PIECE, TYP.
4. (N) LAVATORY W/ BURN SOCK, FOR DETAILED INFO. SEE PLUMBING DRAWINGS, TYP.
5. (N) WALL MOUNTED LAVATORY W/ BURN SOCK, FOR DETAILED INFO. SEE PLUMBING DRAWINGS, TYP.
6. (N) FLOOR MOUNTED WATER CLOSET, FOR DETAILED INFO. SEE PLUMBING DRAWINGS, TYP.
7. (N) URINAL, FOR DETAILED INFO, SEE PLUMBING DRAWINGS, TYP.
8. (N) METAL TOILET PARTION, WHITE, HARDWARE & HANGING TYPE TBD BY OWNER, TYP.
9. (N) METAL URINAL PARTION, WHITE, HARDWARE TBD BY OWNER, TYP.
10. (N) PLASTIC SANITARY SEAT COVER DISPENSOR, WHITE, TYP.
11. (N) TOILET PAPER DISPENSOR, TYP.
12. ~~(N) PAPER TOWEL DISPENSOR, MANFUACTURER TBD BY OWNER, TYP.~~
13. (N) PLASTIC SOAP DISPENSOR, WHITE, TYP.
14. (N) 36" GRAB BAR, INSTALL BLOCKING PER SHEET ADA-1 & 2, TYP.
15. (N) 46" GRAB BAR INSTALL BLOCKING PER SHEET ADA-1 & 2, TYP.
16. (N) HORIZONTAL WALL MOUNTED BABY CHANGING STATION, KOALA KARE KB 110-SSWM, TYP.
17. ~~(N) WALL MOUNTED TODLER SAFETY SEAT, TYP.~~ NOT USED
18. (N) XLERATOR XL-BW ECOB HAND DRYER, WHITE, TYP.
19. (N) WD. DOOR, PAINT TBD BY OWNER, TYP.
20. (N) WD. TRIM, PAINT TBD BY OWNER, TYP.
21. (N) 4" RUBBER TOPSET BASE, MANUFACTURER & COLOR TBD BY OWNER, TYP.
22. (N) SANITARY NAPKIN DISPOSAL BIN, PLASTIC, WHITE, TYP.
23. (N) BASE CABINTERY W/ 1 SHELF & LOCKING HARDWARE ON ALL OPERABLE PARTS, FORMICA LAMINATE FINISH, COLOR TBD BY OWNER, TYP.
24. (N) REMOVABLE KICK PLATE, TYP.
25. (N) HIDE-AWAY CABINET DOORS, NO LOCK, TYP.

NOTE
1.) FOR MOUNTING HEIGHTS AND INFORMATION, SEE SHEETS ADA-1 & ADA-2

THESE DRAWINGS AND SPECIFICATIONS ARE THE SOLE PROPERTY OF WHEELER & WHEELER ARCHITECTS, INC. AND SHALL NOT BE REPRODUCED WITHOUT WET STAMP AND SIGNATURE OF ARCHITECT OF RECORD. THESE DRAWINGS AND SPECIFICATIONS NOT TO BE USED FOR ANY OTHER WORK, OR PORTION THEREOF, THAN THAT NOTED ON TITLE BLOCK. PLEASE CONTACT THE ARCHITECT OF RECORD AT 405.624.5095 IF ANY ATTEMPT IS MADE TO DO SO
© 2011 WHEELER & WHEELER ARCHITECTS, INC.

NO.	DATE	REVISION
1	10.28.15	PLAN CHECK SUBMITTAL
2	12.14.15	PLAN CHECK REVISIONS

WHEELER & WHEELER
ARCHITECTS
ARCHITECTURE ■ INTERIORS ■ PLANNING
133 South Spring Street, Claremont, California 91711 909-624-5095 FAX 909-621-7757
PAUL R. WHEELER AIA REGISTERED ARCHITECT C17282 MARSHA A. WHEELER AIA REGISTERED ARCHITECT C21893

INTERIOR ELEVATIONS

TENANT IMPROVEMENT & EXTERIOR FACADE IMPROVEMENTS for:

Get Air

S.E. Quadrant, Pomona 60 FWY at Corona Expressway
Pomona, California 91766

APN NO. 8331-016-021

DATE	JOB NO.	DRAWN BY
03.04.15	AIR-2521	LMS

DRAWING NO. A5.1

DOOR SCHEDULE

DOOR NUMBER	DOOR DIMENSION WIDTH	DOOR DIMENSION HEIGHT	DOOR DIMENSION THK.	DOOR TYPE	DOOR CORE	DOOR MAT'L	DOOR FINISH	FRAME MAT'L	FRAME FINISH	FRAME DETAILS HEAD	FRAME DETAILS JAMB	FRAME DETAILS SILL	F.R.	REMARKS
1	3'-0"	7'-0"	-	A	-	AL/GL	FF	AL	FF	4/A2.1	4/A2.1	-	N.R.	TEMPER GLAZING
2	3'-0"	7'-0"	-	A	-	AL/GL	FF	AL	FF	4/A2.1	4/A2.1	-	N.R.	TEMPER GLZAING
3	16'-0"	7'-0"	-	B	-	AL	FF	AL	FF	3/A2.1	-	-	N.R.	-
4	3'-0"	7'-0"	-	A	-	AL/GL	FF	AL	FF	4/A2.1	4/A2.1	-	N.R.	TEMPER GLAZING
5	16'-0"	7'-0"	-	B	-	AL	FF	AL	FF	3/A2.1	-	-	N.R.	-
6	3'-0"	7'-0"	-	A	-	AL/GL	FF	AL	FF	4/A2.1	4/A2.1	-	N.R.	TEMPER GLAZING
7	3'-0"	7'-0"	1 3/4"	C	H.C.	AL	FF	AL	FF	4/A2.1	4/A2.1	-	N.R.	
8	3'-0"	7'-0"	1 3/4"	C	H.C.	AL	FF	AL	FF	4/A2.1	4/A2.1	-	N.R.	
9	3'-0"	7'-0"	1 3/4"	C	H.C.	AL	FF	AL	FF	4/A2.1	4/A2.1	-	N.R.	
10	3'-0"	7'-0"	1 3/4"	C	H.C.	AL	FF	AL	FF	4/A2.1	4/A2.1	-	N.R.	
11	3'-0"	7'-0"	1 3/4"	C	H.C.	AL	FF	AL	FF	4/A2.1	4/A2.1	-	N.R.	
12	3'-0"	7'-0"	1 3/4"	C	H.C.	AL	FF	AL	FF	4/A2.1	4/A2.1	-	N.R.	

NOTES:

WINDOW SCHEDULE

WINDOW LETTER	WINDOW DIMENSION WIDTH	WINDOW DIMENSION HEIGHT	WINDOW DIMENSION HD A.F.F.	WINDOW TYPE	GLAZ'G	FRAME	OPER	TINT	FRAME DETAILS HEAD	FRAME DETAILS JAMB	FRAME DETAILS SILL	F.R.	REMARKS
~~A~~	~~6'-0"~~	~~3'-0"~~	~~3'-0"~~	~~F~~	~~SNGL~~	~~AL~~	~~YES~~	~~CLR~~	~~9/A2.1~~	~~9/A2.1~~	~~9/A2.1~~	~~NO~~	NOT USED
~~B~~	~~6'-0"~~	~~3'-0"~~	~~3'-0"~~	~~F~~	~~SNGL~~	~~AL~~	~~YES~~	~~CLR~~	~~9/A2.1~~	~~9/A2.1~~	~~9/A2.1~~	~~NO~~	NOT USED
~~C~~	~~6'-0"~~	~~3'-0"~~	~~3'-0"~~	~~F~~	~~SNGL~~	~~AL~~	~~YES~~	~~CLR~~	~~9/A2.1~~	~~9/A2.1~~	~~9/A2.1~~	~~NO~~	NOT USED

NOTES:
1. ANY GLAZING WITHIN 24" OF DOOR MUST BE TEMPERED, TYP.
2. ALL POWER OPERATED DOORS ARE TO BE CAPABLE OF BEING MANUALLY OPENED TO PERMIT EXIT TRAVEL IN THE EVENT OF POWER FAILURE. THE FORCES REQUIRED TO OPEN THESE DOORS MANUALLY SHALL NOT EXCEED THOSE SPECIFIED IN SECTION 1008.1.3, EXCEPT THAT THE FORCE TO SET THE DOOR IN MOTION SHALL NOT EXCEED50 POUNDS.

INTERIOR FINISH SCHEDULE

ROOM NAME	FLOOR MAT'L	FLOOR FINISH	BASE MAT'L	BASE FINISH	WALL N MAT'L	WALL N FINISH	WALL E MAT'L	WALL E FINISH	WALL S MAT'L	WALL S FINISH	WALL W MAT'L	WALL W FINISH	CEILING MAT'L	CEILING FINISH	CEILING HEIGHT	CABINETS FACE MAT'L	CABINETS FACE FINISH	CABINETS TOP MAT'L	CABINETS TOP FINISH	DOORS	TRIM	WINDOWS	REMARKS
(E) VESTIBULE	10	F1	20	B1	30	P1	30	P1	30	P1	30	P1	43	P1	-	-	-	-	-	P1	P1		
(N) SALES FLOOR	10	F1	20	B1	30	P1	31	P1	31	P1	30	P1	43	P1	-	50	C1	52	C2	P1	P1		
(N) WAITING	10	F1	20	B1	30	P1	30	P1	30	P1	31	P1	43	P1	-	-	-	-	-	P1	P1		
(N) LOST & FOUND	10	F1	20	B1	30	P1	30	P1	31	P1	30	P1	43	P1	-	50	C1	52	C2	P1	P1		
(N) OFFICE 1	10	F1	20	B1	31	P1	31	P1	31	P1	31	P1	43	P1	-	-	-	-	-	P1	P1		
(N) OPEN PARTY ROOM 1	10	F1	20	B1	31	P1	31	P1	31	P1	31	P1	43	P1	-	-	-	-	-	P1	P1		
(N) PR. PARTY ROOM 1	10	F1	20	B1	31	P1	31	P1	31	P1	31	P1	43	P1	-	-	-	-	-	P1	P1		
(N) PR. PARTY ROOM 2	10	F1	20	B1	31	P1	31	P1	31	P1	31	P1	43	P1	-	-	-	-	-	P1	P1		
(N) PR PARTY ROOM 3	10	F1	20	B1	31	P1	31	P1	31	P1	31	P1	43	P1	-	-	-	-	-	P1	P1		
(N) CORRIDOR 1	12	F3	21	B2	31	P1	31	P1	31	P1	31	P1	41	P1	9'-0"	-	-	-	-	P1	P1		
(N) WOMEN'S RESTROOM 1	12	F3	21	B2	32	P1/W1	32	P1/W1	32	P1/W1	32	P1/W1	42	P1	9'-0"	-	-	52	C2	P1	P1		
(N) MEN'S RESTROOM 1	12	F3	21	B2	32	P1/W1	32	P1/W1	32	P1/W1	32	P1/W1	42	P1	9'-0"	-	-	52	C2	P1	P1		
(N) FAMILY RESTROOM	12	F3	21	B2	32	P1/W1	32	P1/W1	32	P1/W1	32	P1/W1	42	P1	9'-0"	-	-	52	C2	P1	P1		
(N) WASH AREA	12	F3	21	B2	32	P1/W1	32	P1/W1	32	P1/W1	32	P1/W1	42	P1	9'-0"	-	-	-	-	P1	P1		
(N) CATWALK	11	F2	-	-	-	-	-	-	-	-	-	-	43	P1	-	-	-	-	-	P1	P1		
(N) TRAMPOLINE AREA	-	-	-	-	30	P1	30	P1	30	P1	30	P1	43	P1	-	-	-	-	-	P1	P1		
(N) OFFICE 2	10	F1	20	B1	30	P1	30	P1	30	P1	30	P1	40	P1	9'-0"	-	-	-	-	P1	P1		
(E) CORRIDOR 2	10	F1	20	B1	30	P1	30	P1	30	P1	30	P1	43	P1	-	-	-	-	-	P1	P1		
(N) WOMEN'S RESTROOM 2	12	F3	21	B2	32	P1/W1	32	P1/W1	32	P1/W1	32	P1/W1	42	P1	9'-0"	-	-	52	C2	P1	P1		
(N) MEN'S RESTROOM 2	12	F3	21	B2	32	P1/W1	32	P1/W1	32	P1/W1	32	P1/W1	42	P1	9'-0"	-	-	52	C2	P1	P1		
(E) JANITORIAL	12	F3	21	B2	32	P1/W1	32	P1/W1	32	P1/W1	32	P1/W1	42	P1	9'-0"	-	-	-	-	P1	P1		
(E) TELE. EQUIP.	10	F1	20	B1	30	P1	30	P1	30	P1	30	P1	43	P1	-	-	-	-	-	P1	P1		
(N) STG.	10	F1	20	B1	30	P1	30	P1	30	P1	30	P1	43	P1	-	-	-	-	-	P1	P1		
(E) UTILITY ROOM	10	F1	20	B1	30	P1	30	P1	30	P1	30	P1	43	P1	-	-	-	-	-	P1	P1		
(N) WASH ROOM	12	F3	21	B2	32	P1/W1	32	P1/W1	32	P1/W1	32	P1/W1	42	P1	9'-0"	-	-	52	C2	P1	P1		

GENERAL MATERIALS LEGEND

SYMBOL	DESCRIPTION
10	PAINT
11	CARPET
12	TILE
20	6 INCH RUBBER TOPSET BASE
21	4 INCH RUBBER TOP SET BASE
30	EXISTING GYP. BOARD
31	NEW GYP BOARD, LT. ORANGE PEEL FINISH
32	NEW GREEN BOARD, LT. ORANGE PEEL FINISH & FRP WAINSCOT
40	EXISTING GYP. BOARD
41	NEW GYP BOARD, LT. ORANGE PEEL FINISH
42	NEW GREEN BOARD, LT. ORANGE PEEL FINISH
43	EXISTING OPEN CEILING, BLACK PAPER FACED INSULATION
50	CABINTERY
51	COUNTER TOP

INTERIOR FINISH LEGEND

	SYM.	MANUFACTURER	DESCRIPTION
FLOORING	F-1	SHERWIN WILLIAMS	COLOR TBD BY OWNER
	F-2	MOHAWK	LEVEL LOOP SOLUTION DYED COLORSTRAND, COLOR TBD
	F-3	TBD BY OWNER	QUALITY TO BE MID-RANGE, COMMERCIAL GRADE, COLOR TBD BY OWNER
BASE	B-1	TBD BY OWNER	QUALITY TO BE MID-RANGE, COMMERCIAL GRADE, COLOR TBD BY OWNER
	B-2	TBD BY OWNER	QUALITY TO BE MID-RANGE, COMMERCIAL GRADE, COLOR TBD BY OWNER
PAINT	P-1	SHERWIN WILLIAMS	COLOR TBD BY OWNER
WALL FINISHES	W-1	TBD BY OWNER	WHITE FRP, 48" A.F.F.
CABS	C-1	TBD BY OWNER	QUALITY TO BE MID-RANGE, COMMERCIAL GRADE, COLOR TBD BY OWNER
	C-2	TBD BY OWNER	QUALITY TO BE MID-RANGE, COMMERCIAL GRADE, COLOR TBD BY OWNER

NOTES:
1. ALL MANUFACTURERS AND COLORS ARE TO BE DETERMINED BY THE OWNER.
2. ALL PRODUCTS NOT SPECIFIED SHALL BE OF MID-RANGE, COMMERCIAL GRADE QUALITY, TYP.
3. INTERIOR WALL AND CEILING FINISHES SHALL BE CLASSIFIED IN ACCORDANCE WITH BUILDING CODE 803 AND TABLE 803.5

DOOR + WINDOW TYPES

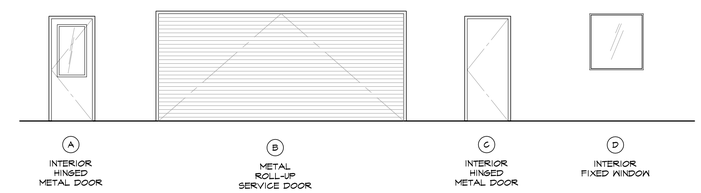

THESE DRAWINGS AND SPECIFICATIONS ARE THE SOLE PROPERTY OF WHEELER & WHEELER ARCHITECTS, INC. AND SHALL NOT BE REPRODUCED WITHOUT WRITTEN PERMISSION. THESE DRAWINGS AND SPECIFICATIONS ARE TO BE USED FOR ANY OTHER WORK, OR PORTION THEREOF, THAN THAT NOTED ON TITLE BLOCK. THESE DRAWINGS ARE TO BE RETURNED UPON REQUEST. 42 U.S.C. 2000d-7 PROHIBITS ANY ATTEMPT IS MADE TO DO SO.
© 2011 WHEELER & WHEELER ARCHITECTS, INC.

NO.	DATE	REVISION

WHEELER & WHEELER
ARCHITECTS
ARCHITECTURE ■ INTERIORS ■ PLANNING
133 South Spring Street, Claremont, California 91711 909-624-5095 FAX 909-621-7757
PAUL R. WHEELER AIA REGISTERED ARCHITECT C12180 MARSHA M. WHEELER AIA REGISTERED ARCHITECT C14183

SCHEDULES

TENANT IMPROVEMENT & EXTERIOR FACADE IMPROVEMENTS for:

Get Air

S.E. Quadrant, Pomona 60 FWY at Corona Expressway
Pomona, California 91766

APN NO. 8331-016-021

DATE 10.01.2014
JOB NO. AIR-2521
DRAWN BY LMS

DRAWING NO. A6.0

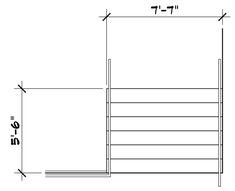

ENLARGED STAIR PLAN

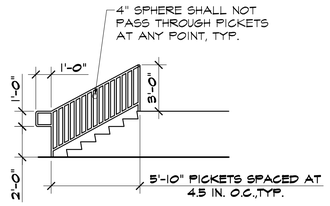

WEST HANDRAIL ELEVATION

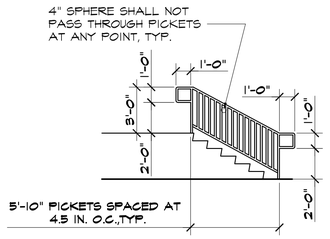

EAST HANDRAIL ELEVATION

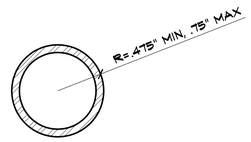

HAND/ GUARD RAIL GRIPPING SURFACE
CROSS SECTION-NTS

SCALE: 1/4"=1'-0"

STAIR HANDRAILS 23

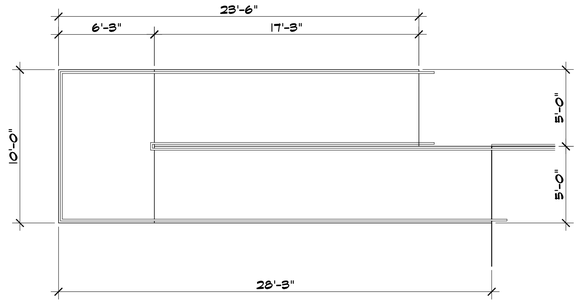

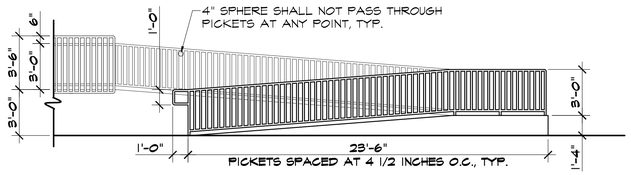

NORTH HANDRAIL ELEVATION

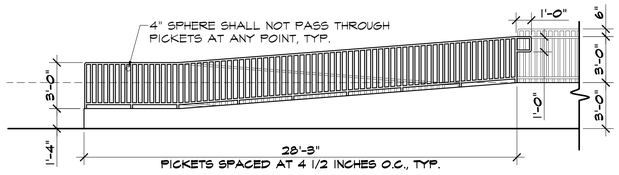

SOUTH HANDRAIL ELEVATION

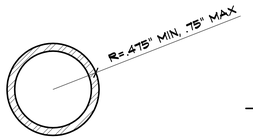

HAND/ GUARD RAIL GRIPPING SURFACE
CROSS SECTION-NTS

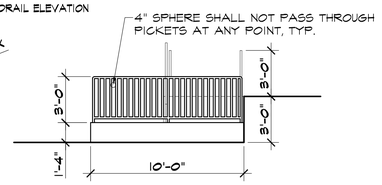

WEST HANDRAIL ELEVATION

SCALE: 1/4"=1'-0"

TYP. RAMP HANDRAIL 13

STUD SIZE	SPACING	HEIGHT	SPACING	HEIGHT
2508125-33	16" O.C.	15'-1"	24" O.C.	12'-10"
3628125-33	16" O.C.	18'-11"	24" O.C.	15'-6"
4008125-33	16" O.C.	20'-0"	24" O.C.	16'-4"

PARTITIONS

1. ALL METAL STUDS SHALL BE "CEMCO" TYPE OR APPROVED EQUAL.
2. THE BRIDGING, BLOCKING OR END BEARING STIFFENERS SHALL BE INSTALLED, AS REQUIRED, BY THE MANUFACTURER UNLESS NOTED OTHERWISE.
3. ALL THE STUDS SHALL CONFORM TO ICC-ESR 3016.
4. UNLESS NOTED OTHERWISE, THE FOLLOWING GUIDELINES ARE TO BE USED FOR STUD SIZE AND SPACING AT INTERIOR PARTITIONS: GYPSUM BOARD FINISH ON BOTH SIDES, TYPICAL.
5. ALL PARTITION WALLS HAVE BEEN DESIGNED FOR 5 psf PER I.B.C. 2010.
6. SCREWS SPECIFIED ARE ITW/BUILDEX SELF DRIVERS PER ICC-ES-ESR 1976 AND C.O.L.A. RR #25415.
7. SHOT PINS SPECIFIED ARE HILTI-SHOT PINS, PER ICC-ES AC43 AND C.O.L.A. RR #25504.
8. CONTINUOUS TRACK/CHANNEL RUNNER @ METAL STUDS TO BE "CEMCO" OR APPROVED EQUAL.
9. ALL METAL STUD BRACES TO BE "CEMCO" OR APPROVED EQUAL.

SCALE: 3/4"=1'-0"

STUD SCHEDULE 6

JOIST SIZE	MAXIMUM SPAN SPACING	MAXIMUM SPAN SPAN	MAXIMUM SPAN SPACING	MAXIMUM SPAN SPAN	BLK'G SPAN
3625525	16" O.C.	8'-0"	24" O.C.	7'-0"	4'-0"
3625520	16" O.C.	11'-0"	24" O.C.	9'-0"	3'-6"
6005520	16" O.C.	16'-0"	24" O.C.	13'-0"	3'-6"

CEILING JOISTS (where occurs)

1. USE "WESTERN METAL" I.C.B.O. #2274 OR APPROVED EQUAL.
2. WHERE CEILING SUPPORTED TOILET PARTITIONS OCCUR, USE 600NCS 18 @ 16"o.c. UP TO 16'-0" MAX. SPAN, TYPICAL.
3. EQUAL SIZE NCS TYPE JOIST CAN BE SUBSTITUTED FOR SS TYPE CALLED IN THE SCHEDULE.
4. STUD TRACKS SHALL BE UNPUNCHED STUDS OF THE SAME GAUGE AS STUDS UNLESS NOTED OTHERWISE, TYPICAL.
5. UNLESS NOTED OTHERWISE, USE ONE LAYER GYPSUM BOARD FOR CEILING JOISTS, TYPICAL.

SCALE: 3/4"=1'-0"

CEILING JOIST SCHEDULE 1

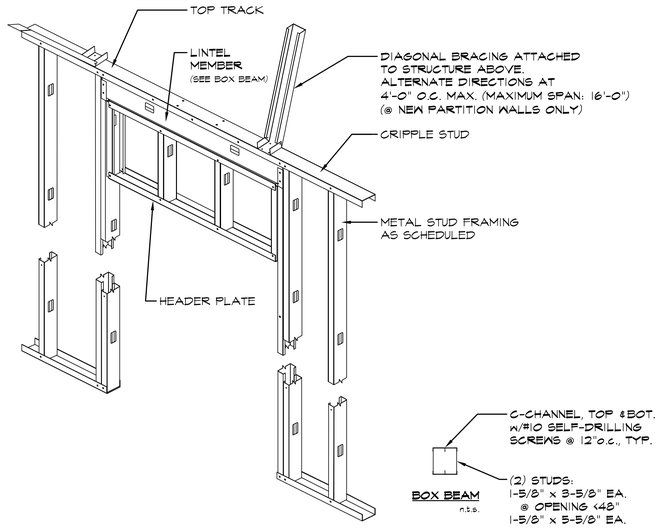

SCALE: 3/4"=1'-0"

WALL FRAM'G @ HDR 3

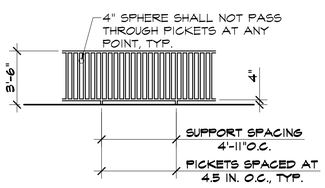

SCALE: 1/4"=1'-0"

TYP. GUARDRAIL 24

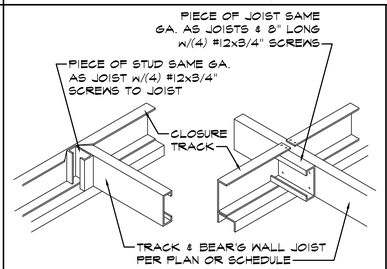

NOTE:
MIN. 1 1/2" MIN. BEAR'G
& EXTERIOR (END) CONDITION.

NOTE:
MIN. 3 1/2" MIN. BEAR'G
& INTERIOR CONDITION.

CLG JOIST @ BEAR'G WALL 19

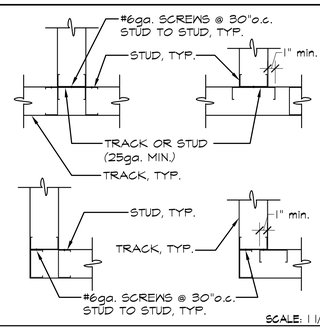

SCALE: 1 1/2"=1'-0"

WALL CONDITIONS 14

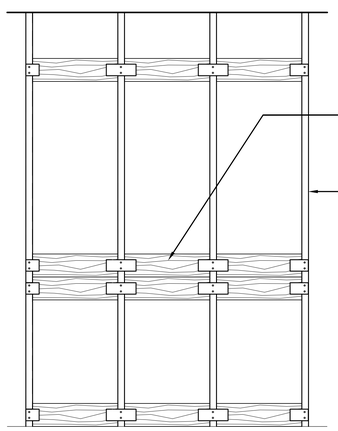

ELEVATION

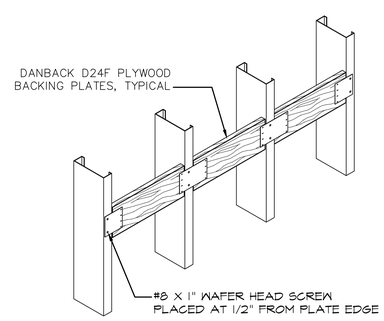

ISOMETRIC

SCALE: 3/4"=1'-0"

REQUIRED BACKING @ GRAB BARS/CABINETS 5

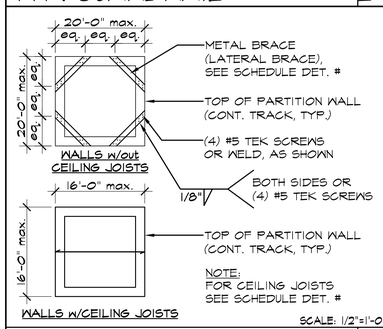

SCALE: 1/2"=1'-0"

WALL BRACING 25

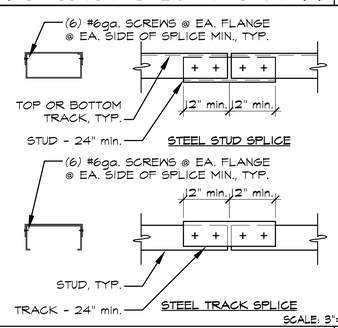

SCALE: 3"=1'-0"

PLATE SPLICE 20

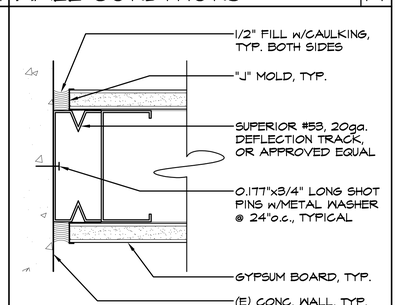

SCALE: 1:2

STUD TO (E) CONC. WALL 15

THESE DRAWINGS AND SPECIFICATIONS ARE THE SOLE PROPERTY OF WHEELER & WHEELER ARCHITECTS, INC. AND SHALL NOT BE REPRODUCED WITHOUT WRITTEN PERMISSION. THESE DOCUMENTS SHALL NOT BE USED FOR ANY OTHER WORK, OR PORTION THEREOF, THAN THAT NOTED ON TITLE BLOCK. ALL RIGHTS RESERVED. COPYRIGHT © 2010 WHEELER & WHEELER ARCHITECTS, INC.

NO.	DATE	REVISION

WHEELER & WHEELER
ARCHITECTS
ARCHITECTURE ■ INTERIORS ■ PLANNING
133 South Spring Street, Claremont, California 91711 909-624-5095 FAX 909-621-7757
PAUL R. WHEELER AIA WHEELER@ARCHITECTS.NET
MARGIE A. WHEELER AIA MWHEELER@ARCHITECTS.NET

DETAILS

TENANT IMPROVEMENT & EXTERIOR FACADE IMPROVEMENTS for:

Get Air

S.E. Quadrant, Pomona 60 FWY at Corona Expressway
Pomona, California 91766

APN NO. 8331-016-021

DATE	JOB NO.	DRAWN BY
10.01.2014	AIR-2521	LMS

DRAWING NO.
D1.0

SITE DEVELOPMENT & ACCESSIBLE ROUTE OF TRAVEL

1. SITE DEVELOPMENT AND GRADING SHALL BE DESIGNED TO PROVIDE ACCESS TO ALL ENTRANCES AND EXTERIOR GROUND FLOOR EXITS, AND ACCESS TO NORMAL PATHS OF TRAVEL, AND WHERE NECESSARY TO PROVIDE ACCESS, SHALL INCORPORATE PEDESTRIAN RAMPS, CURB RAMPS, ETC.

2. WHEN MORE THAN ONE BUILDING OR FACILITY IS LOCATED ON A SITE, ACCESSIBLE ROUTES OF TRAVEL SHALL BE PROVIDED BETWEEN BUILDINGS AND ACCESSIBLE SITE FACILITIES.

3. WHEN A BUILDING OR PORTION OF A BUILDING IS REQUIRED TO BE ACCESSIBLE OR ADAPTABLE, AN ACCESSIBLE ROUTE OF TRAVEL SHALL BE PROVIDED TO ALL PORTIONS OF THE BUILDING, TO ACCESSIBLE BUILDING ENTRANCES, AND BETWEEN THE BUILDING AND THE PUBLIC WAY.

4. WHERE MORE THAN ONE ROUTE OF TRAVEL IS PROVIDED, ALL ROUTES SHALL BE ACCESSIBLE.

WALKS & SIDEWALKS

1. WALKS AND SIDEWALKS SHALL HAVE A CONTINUOUS COMMON SURFACE, NOT INTERRUPTED BY STEPS OR BY ABRUPT CHANGES IN LEVEL EXCEEDING 1/2", AND SHALL BE A MINIMUM OF 48" IN WIDTH.

2. WHEN ABRUPT CHANGES IN LEVEL NOT EXCEEDING 1/2" OCCUR, THEY SHALL BE BEVELED WITH A SLOPE NO GREATER THAN 1:2, EXCEPT THAT LEVEL CHANGES NOT EXCEEDING 1/4" MAY BE VERTICAL.

3. ABRUPT CHANGES IN LEVEL ALONG ANY ACCESSIBLE ROUTE EXCEEDING 1/2" SHALL COMPLY WITH THE REQUIREMENTS FOR CURB RAMPS.

4. WHEN THE SLOPE IN THE DIRECTION OF TRAVEL OF ANY WALK EXCEEDS 1 VERTICAL TO 20 HORIZONTAL IT SHALL COMPLY WITH THE PROVISIONS OF A PEDESTRIAN RAMP.

5. WALK AND SIDEWALK SURFACE CROSS SLOPES SHALL NOT EXCEED 1/4" PER FOOT.

6. WALKS SHALL BE PROVIDED WITH A LEVEL AREA NOT LESS THAN 60" BY 60" AT A DOOR OR GATE THAT SWINGS TOWARD THE WALK, AND NOT LESS THAN 48" WIDE BY 44" DEEP AT A DOOR OR GATE THAT SWINGS AWAY FROM THE WALK.

7. WALKS SHALL EXTEND A MINIMUM OF 24" TO THE SIDE OF THE STRIKE EDGE OF A DOOR OR GATE THAT SWINGS TOWARD THE WALK.

8. ALL WALKS WITH CONTINUOUS GRADIENTS SHALL HAVE LEVEL AREAS AT LEAST 5 FT. IN LENGTH AT INTERVALS OF AT LEAST EVERY 400 FT.

9. WALK AND SIDEWALK SURFACES SHALL BE SLIP-RESISTANT AS-FOLLOWS:

   A. SURFACES WITH A SLOPE OF LESS THAN 6% GRADIENT SHALL BE AT LEAST AS SLIP-RESISTANT AS THAT DESCRIBED AS A MEDIUM STALED FINISH.

   B. SURFACES WITH A SLOPE OF 6% GRADIENT OR GREATER SHALL BE SLIP-RESISTANT.

10. WALKS, SIDEWALKS, AND PEDESTRIAN WAYS SHALL BE FREE OF GRATINGS WHENEVER POSSIBLE. FOR GRATINGS LOCATED IN THE SURFACE OF ANY OF THESE AREAS, GRID OPENINGS IN GRATINGS SHALL BE NO GREATER THAN 1/2" WIDE IN ONE DIRECTION. IF GRATINGS HAVE ENLONGATED OPENINGS, THEY SHALL BE PLACED SO THAT THE LONG DIMENSION IS PERPENDICULAR TO THE DOMINANT DIRECTION OF TRAVEL.

RAMPS

NOTE: ANY PATH OF TRAVEL SHALL BE CONSIDERED A RAMP IF ITS SLOPE IS GRATER THAN 1 FT. RISE IN 20 FT. OF HORIZONTAL RUN.

1. THE MAXIMUM SLOPE OF A RAMP THAT SERVES ANY EXIT WAY, PROVIDES ACCESS FOR PERSONS WITH DISABILITIES, OR IS IN THE PATH OF TRAVEL SHALL BE 1 FT. RISE IN 12 FT. OF HORIZONTAL RUN.

2. THE CROSS SLOPE OF RAMP SURFACES SHALL BE NO GREATER THAN 1:50 (1/4" / FT.)

3. THE WIDTH OF RAMPS SHALL BE AS REQUIRED FOR STAIRWAYS AND EXITS.

4. DOORS IN ANY POSITION SHALL NOT REDUCE THE MINIMUM DIMENSION OF THE RAMP LANDING TO LESS THAN 42" AND SHALL NOT REDUCE THE REQUIRED WIDTH BY MORE THAN 3" WHEN FULLY OPEN.

5. RAMP LANDINGS AREA NOT CONSIDERED IN DETERMINING THE MAXIMUM HORIZONTAL DISTANCE OF EACH RAMP.

6. HANDRAILS ARE REQUIRED ON RAMPS THAT PROVIDE ACCESS IF THE RAMP SLOPE EXCEEDS 1' RISE IN 20' OF HORIZONTAL RUN. HANDRAILS REQUIRED ON BOTH SIDES OF RAMP.

7. THE GRIP PORTION OF HANDRAILS SHALL BE NOT LESS THAN 1 1/4" NOR MORE THAN 1 1/2", OR THE SHAPE SHALL PROVIDE AN EQUIVALENT GRIPPING SURFACE, AND ALL SURFACES SHALL BE SMOOTH WITH NO SHARP CORNERS. HANDRAILS SHALL NOT ROTATE WITHIN THEIR FITTINGS.

8. HANDRAILS PROJECTING FROM A WALL SHALL HAVE A SPACE OF 1-1/2" BETWEEN THE WALL AND THE HANDRAIL.

9. MOUNT HANDRAILS AT 34" TO 38" ABOVE THE RAMP.

10. ANY WALL OR OTHER SURFACE ADJACENT TO HANDRAILS SHALL BE FREE OF SHARP OR ABRASIVE ELEMENTS. EDGES SHALL HAVE A MINIMUM RADIUS OF 1/8".

CURB RAMPS

1. CURB RAMPS SHALL BE A MINIMUM OF 4 FT. IN WIDTH AND SHALL LIE, GENERALLY, IN A SINGLE SLOPED PLANE, WITH A MINIMUM OF SURFACE WARPING AND CROSS SLOPE.

2. MAXIMUM SLOPES OF ADJOINING GUTTERS, ROAD SURFACE IMMEDIATELY ADJACENT TO THE CURB RAMP, OR ACCESSIBLE ROUTE, SHALL NOT EXCEED 1:20 WITHIN 4 FT. OF THE TOP AND BOTTOM OF THE CURB RAMP. THE SLOPE OF THE FANNED OR FLARED SIDES OF CURB RAMPS SHALL NOT EXCEED 1 VERTICAL TO 8 HORIZONTAL.

3. A LEVEL LANDING 4' DEEP SHALL BE PROVIDED AT THE UPPER END OF EACH CURB RAMP OVER ITS FULL WIDTH TO PERMIT SAFE EGRESS FROM THE RAMP SURFACE, OR THE SLOPE OF THE FANNED OR FLARED SIDES OF THE CURB RAMP SHALL NOT EXCEED 1 VERTICAL TO 12 HORIZONTAL.

4. THE TRANSITION FROM RAMPS TO WALKS, GUTTERS OR STREETS SHALL BE FLUSH, PER 1127B.5 ITEM 3. THE SLOPE OF CURB RAMPS SHALL NOT EXCEED ONE UNIT VERTICAL IN 12 UNITS HORIZONTAL (8.33-PERCENT SLOPE). THE SLOPE SHALL BE MEASURED AS SHOWN IN FIGURE 11B-20E. TRANSITIONS FROM RAMPS TO WALKS, GUTTERS OR STREETS SHALL BE FLUSH AND FREE OF ABRUPT CHANGE. MAXIMUM SLOPES OF ADJOINING GUTTERS, ROAD SURFACE IMMEDIATELY ADJACENT TO THE CURB RAMP, OR ACCESSIBLE ROUTE SHALL NOT EXCEED ONE UNIT VERTICAL IN 20 UNITS HORIZONTAL (5-PERCENT SLOPE) WITHIN 4 FEET (1219mm) OF THE TOP AND BOTTOM OF THE CURB RAMP. THE SLOPE OF THE FANNED OR FLARED SIDES OF CURB RAMPS SHALL NOT EXCEED ONE UNIT VERTICAL IN 10 UNITS HORIZONTAL (10-PERCENT SLOPE).

5. THE SURFACE OF EACH CURB RAMP AND ITS FLARED SIDES SHALL BE STABLE, FIRM, AND SLIP-RESISTANT AND SHALL BE OF CONTRASTING FINISH FROM THAT OF THE ADJACENT SIDEWALK.

6. ALL CURB RAMPS SHALL HAVE A GROOVED BORDER 12" WIDE AT THE LEVEL SURFACE OF THE SIDEWALK ALONG THE TOP AND EACH SIDE APPROXIMATELY 3/4" ON CENTER. ALL CURB RAMPS CONSTRUCTED BETWEEN THE FACE OF THE CURB AND THE STREET SHALL HAVE A GROOVED BORDER AT THE LEVEL SURFACE OF THE SIDEWALK.

7. A CURB RAMP SHALL HAVE A DETECTABLE WARNING THAT EXTENDS THE FULL WIDTH AND DEPTH OF THE CURB RAMP INSIDE THE GROOVED BORDER WHEN THE RAMP SLOPE IS LESS THAN 1 VERTICAL TO 15 HORIZONTAL. DETECTABLE WARNINGS SHALL CONSIST OF RAISED TRUNCATED DOMES WITH A DIAMETER OF NOMINAL 0.9" AT THE BASE TAPERING TO 0.45" AT THE TOP, A HEIGHT OF NOMINAL 0.2" AND A CENTER-TO-CENTER SPACING OF NOMINAL 2.35". THE DETECTABLE WARNING SHALL CONTRAST VISUALLY WITH ADJOINING SURFACES, EITHER LIGHT-ON-DARK OR DARK-ON-LIGHT. THE MATERIAL USED TO PROVIDE CONTRAST SHALL BE AN INTEGRAL PART OF THE WALKING SURFACE THE DOMES MAY BE CONSTRUCTED IN A PREFABRICATED SURFACE TREATMENT.

8. CURB RAMPS SHALL BE LOCATED OR PROTECTED TO PREVENT THEIR OBSTRUCTION BY PARKED CARS.

PARKING

1. SURFACE SLOPES OF ACCESSIBLE PARKING SPACES SHALL BE THE MINIMUM POSSIBLE AND SHALL NOT EXCEED 1/4" PER FOOT IN ANY DIRECTION.

2. PEDESTRIAN WAYS WHICH ARE ACCESSIBLE TO PEOPLE WITH DISABILITIES SHALL BE PROVIDED FROM EACH SUCH PARKING SPACE TO RELATED FACILITIES, INCLUDING CURB CUTS OR RAMPS AS NEEDED.

3. ACCESSIBLE PARKING SPACES SHALL BE SO LOCATED THAT PERSONS WITH DISABILITIES ARE NOT COMPELLED TO WHEEL OR WALK BEHIND PARKED CARS OTHER THAN THEIR OWN. RAMP SHALL NOT ENCROACH INTO ANY ACCESSIBLE PARKING SPACE OR THE ADJACENT ACCESS AISLE. THE MAXIMUM CROSS SLOPE IN ANY DIRECTION FOR BOTH PARKING SPACE AND ACCESS AISLE SHALL NOT EXCEED 2% SLOPE.

4. SIGNS TO IDENTIFY ACCESSIBLE PARKING SPACES MAY BE CENTERED ON THE WALL AT THE INTERIOR END OF THE PARKING SPACE AT A MINIMUM HEIGHT OF 36" FROM THE PARKING SPACE FINISHED GRADE, GROUND OR SIDEWALK.

5. VAN ACCESSIBLE PARKING SPACES SHALL HAVE AN ADDITIONAL SIGN STATING "VAN-ACCESSIBLE" MOUNTED BELOW THE SYMBOL OF ACCESSIBILITY.

ENTRANCES & EXITS

1. ALL ENTRANCES AND ALL EXTERIOR GROUND FLOOR EXIT DOORS TO BUILDINGS AND FACILITIES SHALL BE MADE ACCESSIBLE TO PERSONS WITH DISABILITIES.

2. DURING PERIODS OF PARTIAL OR RESTRICTED USE OF A BUILDING OR FACILITY, THE ENTRANCES USED FOR PRIMARY ACCESS SHALL BE ACCESSIBLE TO AND USABLE BY PERSONS WITH DISABILITIES.

3. EXIT DOORS SHALL BE OPEN ABLE FROM THE INSIDE WITHOUT THE USE OF A KEY OR ANY SPECIAL KNOWLEDGE OR EFFORT.

4. MANUALLY OPERATED EDGE OR SURFACE-MOUNTED FLUSH BOLTS AND SURFACE BOLTS ARE PROHIBITED. WHEN EXIT DOORS ARE USED IN PAIRS AND APPROVED AUTOMATIC FLUSH BOLTS ARE USED, THE DOOR LEAF HAVING THE AUTOMATIC FLUSH BOLTS SHALL HAVE NO DOORKNOB OR SURFACE-MOUNTED HARDWARE. THE UNLATCHING OF ANY LEAF SHALL NOT REQUIRE MORE THAN ONE OPERATION.

5. LATCHING AND LOCKING DOORS THAT ARE HAND ACTIVATED AND WHICH ARE IN A PATH OF TRAVEL SHALL BE OPERABLE WITH A SINGLE EFFORT BY LEVER TYPE HARDWARE, PANIC BARS, PUSH-PULL ACTIVATING BARS, OR OTHER HARDWARE DESIGNED TO PROVIDE PASSAGE WITHOUT REQUIRING THE ABILITY TO GRASP THE OPENING HARDWARE. LOCKED EXIT DOORS SHALL OPERATE AS ABOVE IN EGRESS DIRECTION.

6. HAND-ACTIVATED DOOR OPENING HARDWARE SHALL BE CENTERED BETWEEN 30" AND 44" ABOVE THE FLOOR.

7. EVERY REQUIRED EXIT DOORWAY WHICH IS LOCATED WITHIN AN ACCESSIBLE PATH OF TRAVEL SHALL BE CAPABLE OF OPENING AT LEAST 90°, SHALL HAVE A MINIMUM CLEAR OPENING OF 32", AND SHALL BE OF A SIZE AS TO PERMIT THE INSTALLATION OF A DOOR NOT LESS THAN 3' IN WIDTH AND NOT LESS THAN 6'8" IN HEIGHT.

8. FOR HINGED DOORS, THE OPENING WIDTH SHALL BE MEASURED WITH THE DOOR POSITIONED AT AN ANGLE OF 90 DEGREES FROM ITS CLOSED POSITION.

9. WHERE A PAIR OF DOORS IS UTILIZED, AT LEAST ONE OF THE DOORS SHALL PROVIDE A CLEAR, UNOBSTRUCTED OPENING WITH OF 32" WITH THE LEAF POSITIONED AT AN ANGLE OF 90 DEGREES FROM ITS CLOSED POSITION.

10. WHEN AN AUTOMATIC DOOR OPERATOR IS UTILIZED TO OPERATE A PAIR OF DOORS, AT LEAST ONE OF THE DOORS SHALL PROVIDE A CLEAR, UNOBSTRUCTED OPENING WIDTH OF 32" WITH THE DOOR POSITIONED AT AN ANGLE OF 90 DEGREES FROM ITS CLOSED POSITION.

11. MINIMUM MANEUVERING CLEARANCES AT DOORS SHALL BE AS SHOWN IN FIGURES_____. THE FLOOR OR GROUND AREA WITHIN THE REQUIRED CLEARANCES SHALL BE LEVEL AND CLEAR.

12. THE FLOOR OR LANDING SHALL BE NOT MORE THAN 1/2" LOWER THAN THE THRESHOLD OF THE DOORWAY.

13. THE BOTTOM 10" OF ALL DOORS EXCEPT AUTOMATIC SLIDING DOORS SHALL HAVE SMOOTH, UNINTERRUPTED SURFACE TO ALLOW THE DOOR TO BE OPENED BY A WHEELCHAIR FOOTREST WITHOUT CREATING A TRAP OR HAZARDOUS CONDITION. WHERE NARROW FRAME DOORS AS USED, A 10" HIGH SMOOTH PANEL SHALL BE INSTALLED ON THE PUSH SIDE OF THE DOOR, WHICH WILL ALLOW THE DOOR TO BE OPENED BY A WHEELCHAIR FOOTREST WITHOUT CREATING A TRAP OR HAZARDOUS CONDITION.

14. MAXIMUM EFFORT TO OPERATE DOORS SHALL NOT EXCEED 5 POUNDS FOR EXTERIOR DOORS AND 5 POUNDS FOR INTERIOR DOORS; SUCH PULL OR PUSH EFFORT BEING APPLIED AT RIGHT ANGLES TO HINGED DOORS AND AT THE CENTER PLANE OF SLIDING OR FOLDING DOORS. COMPENSATING DEVICES OR AUTOMATIC DOOR OPERATORS MAY BE UTILIZED TO MEET THE ABOVE STANDARDS. WHEN FIRE DOORS ARE REQUIRED, THE MAXIMUM EFFORT TO OPERATE THE DOOR MAY BE INCREASED TO THE MAXIMUM ALLOWABLE BY THE APPROPRIATE ADMINISTRATIVE AUTHORITY, NOT TO EXCEED 15 POUNDS.

15. WHERE TURNSTILES ARE UTILIZED IN A FACILITY FOR THE PURPOSE OF PROVIDING FULLY CONTROLLED ACCESS, A DOOR OR GATE THAT IS ACCESSIBLE TO PERSONS WITH DISABILITIES SHALL BE PROVIDED ADJACENT TO OR WITHIN A DISTANCE NOT TO EXCEED 30 FT. FROM EACH TURNSTILE EXIT OR ENTRANCE. THE ALTERNATE PASSAGEWAY SHALL BE MAINTAINED IN AN UNLOCKED CONDITION DURING BUSINESS HOURS AND THE DOOR OR GATE SHALL NOT ACTIVATE A PUBLICLY AUDIBLE ALARM SYSTEM. WHERE POSTS, RAILS, OR OTHER PEDESTRIAN CONTROLS ARE UTILIZED, THEY SHALL PROVIDE 32" OF CLEAR OPENING.

6. ALL TREAD SURFACES SHALL BE SLIP-RESISTANT. TREADS SHALL HAVE SMOOTH, ROUNDED, OR CHAMFERED EXPOSED EDGES, AND NO ABRUPT EDGES AT THE NOSING (LOWER FRONT EDGE).

7. THE NOSING SHALL NOT PROJECT MORE THAN 1-1/2" PAST THE FACE OF THE RISER BELOW.

8. OPEN RISERS ARE NOT PERMITTED.

FLOORS & LEVELS

1. IN BUILDINGS AND FACILITIES, FLOORS OF A GIVEN STORY SHALL BE A COMMON LEVEL THROUGHOUT, OR SHALL BE CONNECTED BY PEDESTRIAN RAMPS, PASSENGER ELEVATORS, OR SPECIAL ACCESS LIFTS.

2. GROUND AND FLOOR SURFACES ALONG ACCESSIBLE ROUTES AND IN ACCESSIBLE ROOMS AND SPACES, INCLUDING FLOORS, WALKS, RAMPS, STAIRS, AND CURB RAMPS, SHALL BE STABLE, FIRM AND SLIP-RESISTANT.

3. CHANGES IN LEVEL UP TO 1/4" MAY BE VERTICAL AND WITHOUT EDGE TREATMENT.

4. CHANGES IN LEVEL BETWEEN 1/4" AND 1/2" SHALL BE ACCOMPLISHED BY MEANS OF A RAMP NO STEEPER THAN 1 VERTICAL TO 2 HORIZONTAL.

5. IF CARPET OR CARPET TILE IS USED ON A GROUND OR FLOOR SURFACE, IT SHALL BE SECURELY ATTACHED; HAVE A FIRM CUSHION, PAD OR BACKING OR NO CUSHION OR PAD; AND HAVE A LEVEL LOOP, TEXTURED LOOP, LEVEL CUT PILE, OR LEVEL CUT/UNCUT PILE TEXTURE. THE MAXIMUM PILE HEIGHT SHALL BE 1/2". EXPOSED EDGES OF CARPET SHALL BE FASTENED TO FLOOR SURFACES AND HAVE TRIM ALONG THE ENTIRE LENGTH OF THE EXPOSED EDGE. CARPET EDGE TRIM SHALL COMPLY.

SANITARY FACILITIES

1. A CLEAR SPACE MEASURED FROM A FLOOR TO A HEIGHT TO 27" ABOVE THE FLOOR, WITHIN THE SANITARY FACILITY ROOM, OF SUFFICIENT SIZE TO INSCRIBE A CIRCLE WITH A DIAMETER NOT LESS THAN 60", OR A CLEAR SPACE 56" BY 63" IN SIZE, SHALL BE PROVIDED FOR WHEELCHAIR MANEUVERING. DOORS OTHER THAN THE DOOR TO THE ACCESSIBLE TOILET COMPARTMENT IN ANY POSITION MAY ENCROACH INTO THIS SPACE BY NOT MORE THAN 12". DOORS FOR SINGLE ACCOMMODATIONS RESTROOMS MAY NOT ENCROUCH INTO THE REQUIRED MANEUVERING SPACE.

2. A WATER CLOSET FIXTURE LOCATED IN A COMPARTMENT SHALL PROVIDE A MINIMUM 28" WIDE CLEAR SPACE FROM A FIXTURE OR A MINIMUM 32" WIDE CLEAR SPACE FORM A WALL AT ONE SIDE OF THE WATER CLOSET. THE OTHER SIDE OF THE WATER CLOSET SHALL PROVIDE 18" FROM THE CENTERLINE OF THE WATER CLOSET TO THE WALL. GRAB BARS SHALL NOT PROJECT MORE THAN 3" INTO THESE SPACES.

3. A MINIMUM 48" LONG CLEAR SPACE SHALL BE PROVIDED IN FRONT OF THE WATER CLOSET IF THE COMPARTMENT HAS AN END OPENING DOOR AND A MINIMUM 60" LONG CLEAR SPACE SHALL BE PROVIDED IN FRONT OF THE WATER CLOSET IF THE COMPARTMENT HAS A DOOR LOCATED AT THE SIDE. GRAB BARS SHALL NOT PROJECT MORE THAN 3" INTO THESE CLEAR SPACES.

4. WHEN STANDARD COMPARTMENTS DOORS ARE USED, WITH A MINIMUM 9" CLEARANCE FOR FOOTRESTS UNDERNEATH AND A SELF-CLOSING DEVICE, CLEARANCE AT THE STRIKE EDGE AS SPECIFIED IN SECTION 1133B.2.4.3 IS NOT REQUIRED.

ACCESSIBLE WATER CLOSETS

1. IF THE COMPARTMENT HAS A SIDE-OPENING DOOR, A MINIMUM OF 60 INCHES WIDE AND 60 INCHES DEEP CLEAR FLOOR SPACE SHALL BE PROVIDED IN FRONT OF THE WATER CLOSET.

2. THE WATER CLOSET COMPARTMENT SHALL BE EQUIPPED WITH A DOOR THAT HAS AN AUTOMATIC-CLOSING DEVICE, AND SHALL HAVE A CLEAR, UNOBSTRUCTED OPENING WIDTH OF 32 INCHES WHEN LOCATED AT THE END AND 34 INCHES WHEN LOCATED AT THE SIDE WITH THE DOOR POSITIONED AT AN ANGLE OF 90 DEGREES FROM ITS CLOSED POSITION.

3. THE INSIDE AND OUTSIDE OF THE COMPARTMENT DOOR SHALL BE EQUIPPED WITH A LOOP OR U-SHAPED HANDLE IMMEDIATELY BELOW THE LATCH. THE LATCH SHALL BE FLIP-OVER STYLE, SLIDING OR OTHER HARDWARE NOT REQUIRING THE USER TO GRASP OR TWIST. EXCEPT FOR DOOR-OPENING WIDTHS AND DOOR SWINGS, A CLEAR, UNOBSTRUCTED ACCESS OF NOT LESS THAN 44 INCHES SHALL BE PROVIDED TO WATER CLOSET COMPARTMENTS DESIGNED FOR USE BY PERSONS WITH DISABILITIES. MANEUVERING SPACE AT THE COMPARTMENT DOOR SHALL COMPLY WITH SECTIONS 1133B.2.4.2 AND 1133B.2.4.3, AND IN NO CASE SHALL THE SPACE IMMEDIATELY OUTSIDE OF THE WATER CLOSET COMPARTMENT DOOR BE LESS THAN 48 INCHES, AS MEASURED PERPENDICULAR TO THE COMPARTMENT DOOR IN ITS CLOSED POSITION.

4. A MINIMUM OF 60 INCHES WIDE AND 48 INCHES DEEP CLEAR FLOOR SPACE SHALL BE PROVIDED IN FRONT OF THE WATER CLOSET.

5. CONTROLS SHALL BE OPERABLE WITH ONE HAND AND SHALL NOT REQUIRE TIGHT GRASPING, PINCHING, OR TWISTING. CONTROLS FOR THE FLUSH VALVES SHALL BE MOUNTED ON THE WIDE SIDE OF TOILET AREAS, NO MORE THAN 44 INCHES ABOVE THE FINISHED FLOOR. THE FORCE REQUIRED TO ACTIVATE CONTROLS SHALL BE NO GREATER THAN 5 POUNDS-FORCE (lbf).

SANITARY FACILITY FIXTURES & ACCESSORIES

1. THE HEIGHT OF ACCESSIBLE WATER CLOSETS SHALL BE A MINIMUM OF 17" AND MAXIMUM OF 19" MEASURED TO THE TOP OF A MAXIMUM 2" HIGH TOILET SEAT, EXCEPT THAT 3" SEATS SHALL BE PERMITTED ONLY IN ALTERATIONS WHERE THE EXISTING FIXTURE IS LESS THAN 15" HIGH.

2. HOT WATER AND DRAIN PIPES ACCESSIBLE UNDER LAVATORIES SHALL BE INSULATED OR OTHERWISE COVERED. THERE SHALL BE NO SHARP OR ABRASIVE SURFACES UNDER LAVATORIES.

3. CONTROLS FOR WATER CLOSET FLUSH VALVES SHALL BE MOUNTED ON THE WIDE SIDE OF TOILET AREA.

4. WATER CLOSET AND URINAL FLUSH VALVE CONTROLS, AND FAUCET AND OPERATING MECHANISM CONTROLS, SHALL BE OPERABLE WITH ONE HAND, SHALL NOT REQUIRED TIGHT GRASPING, PINCHING, OR TWISTING OF THE WRIST, AND SHALL BE MOUNTED NO MORE THAN 44" ABOVE THE FLOOR.

5. THE FORCE REQUIRED TO ACTIVATE WATER CLOSET AND URINAL FLUSH VALVE CONTROLS, AND FAUCET AND OPERATING MECHANISM CONTROLS, SHALL BE NO GREATER THAN 5 LB/LF.

6. SELF-CLOSING FAUCET CONTROL VALVES ARE ALLOWED IF THE FAUCET REMAINS OPEN FOR AT LEAST 10 SECONDS.

7. TOILET TISSUE DISPENSERS SHALL BE LOCATED ON THE WALL WITHIN 12" OF THE FRONT EDGE OF THE TOILET SEAT AND NO LOWER THAN 19" FROM THE FLOOR. DISPENSERS THAT CONTROL DELIVERY OR THAT DO NOT PERMIT CONTINUOUS PAPER FLOW SHALL NOT BE USED.

GRAB BARS

1. GRAB BARS SHALL BE SECURELY ATTACHED 33" ABOVE AND PARALLEL TO THE FLOOR, EXCEPT THAT WHERE A TANK-TYPE TOILET IS USED WHICH OBSTRUCTS PLACEMENT AT 33", THE GRAB BAR MAY BE AS HIGH AS 36".

2. THE DIAMETER OR WIDTH OF THE GRIPPING SURFACES OF A GRAB BAR SHALL BE 1-1/4" TO 1-1/2" OR THE SHAPE SHALL PROVIDE AN EQUIVALENT GRIPPING SURFACE. IF GRAB BARS ARE MOUNTED ADJACENT TO A WALL, THE SPACE BETWEEN THE WALL AND THE GRAB BARS SHALL BE 1-1/2".

3. THE STRUCTURAL STRENGTH OF GRAB BARS, TUB AND SHOWER SEATS, FASTENERS, AND MOUNTING DEVICES SHALL MEET THE FOLLOWING SPECIFICATIONS.

   A. BENDING STRESS IN GRAB BARS OR SEAT INDUCED BY THE MAXIMUM BENDING MOMENT FROM THE APPLICATION OF A 250-LB POINT LOAD SHALL BE LESS THAN THE ALLOWABLE STRESS FOR THE MATERIAL OF THE GRAB BAR OR SEAT.

   B. SHEAR STRESS INDUCED IN A GRAB BAR OR SEAT BY THE APPLICATION OF A 250 LB POINT LOAD SHALL BE LESS THAN THE ALLOWABLE SHEAR STRESS FOR THE MATERIAL OF THE GRAB BAR OR SEAT, AND MOUNTING BRACKET OR OTHER SUPPORT IS CONSIDERED TO BE FULLY RESTRAINED. THEN DIRECT AND TORSIONAL SHEAR STRESSES SHALL NOT EXCEED THE ALLOWABLE SHEAR STRESS.

   C. SHEAR FORCE INDUCED IN A FASTENER OR MOUNTING DEVICE FROM THE APPLICATION OF A 250 LB POINT LOAD SHALL BE LESS THAN THE ALLOWABLE LATERAL LOAD OF EITHER THE FASTENER OR MOUNTING DEVICE OR THE SUPPORTING STRUCTURE, WHICHEVER HAS THE SMALLER ALLOWABLE LOAD.

   D. TENSILE FORCE INDUCED IN A FASTENER BY A DIRECT TENSION FORCE OF A 250-LB POINT LOAD, PLUS THE MAXIMUM MOMENT FROM THE APPLICATION OF A 250-LB POINT LOAD, SHALL BE LESS THAN THE ALLOWABLE WITHDRAWAL LOAD BETWEEN THE FASTENER AND SUPPORTING STRUCTURE.

   E. GRAB BARS SHALL NOT ROTATE WITHIN THEIR FITTINGS.

4. THE GRAB BAR ANY WALL OR OTHER SURFACE ADJACENT TO IT SHALL BE FREE OF ANY SHARP OR ABRASIVE ELEMENTS. EDGES SHALL HAVE MINIMUM RADIUS OF 1/8".

THESE DRAWINGS AND SPECIFICATIONS ARE THE PROPERTY OF WHEELER & WHEELER ARCHITECTS, INC. AND SHALL NOT BE REPRODUCED WITHOUT WRITTEN PERMISSION. THE SEAL, STAMP AND SIGNATURE OF ARCHITECT OF RECORD, WHEN APPLIED, MUST TO BE USED FOR ANY OTHER WORK, OR PORTION THEREOF, THAN THAT NOTED ON TITLE BLOCK. PLEASE CONTACT WHEELER & WHEELER AT 909.624.5095 IF ANY ATTEMPT IS MADE TO DO SO.
© 2011 WHEELER & WHEELER ARCHITECTS, INC.

NO.	DATE	REVISION

WHEELER & WHEELER
ARCHITECTS
ARCHITECTURE ■ INTERIORS ■ PLANNING
133 South Spring Street, Claremont, California 91711 909-624-5095 FAX 909-621-7757
BILL E. WHEELER AIA FAIA #C-12745 WENDY A. WHEELER AIA #C-14043

ACCESSIBILITY NOTES

TENANT IMPROVEMENT & EXTERIOR FACADE IMPROVEMENTS for:

Get Air

S.E. Quadrant, Pomona 60 FWY at Corona Expressway
Pomona, California 91766

APN NO. 8331-016-021

DATE	10.01.2014
JOB NO.	AIR-2521
DRAWN BY	-

DRAWING NO. ADA1

CONTROLS & OPERATING MECHANISMS

1. CONTROLS AND OPERATING MECHANISMS REQUIRED TO BE ACCESSIBLE SHALL COMPLY WITH THE REQUIREMENTS.
2. CLEAR FLOOR SPACE COMPLYING WITH THAT ALLOWS A FORWARD OR PARALLEL APPROACH BY A PERSON USING A WHEELCHAIR SHALL BE PROVIDED AT CONTROLS, DISPENSERS, RECEPTACLES, AND OTHER OPERABLE EQUIPMENT.
3. THE HIGHEST OPERABLE PART OF ALL CONTROLS, DISPENSERS, RECEPTACLES, AND OTHER OPERABLE EQUIPMENT SHALL BE PLACED WITHIN 48" OF THE FLOOR BUT NOT LOWER THAN 15" IF FORWARD APPROACHED AND WITHIN BUT NOT LOWER THAN 9" IF SIDE APPROACHED.
4. CONTROLS AND OPERATING MECHANISMS SHALL BE OPERABLE WITH ONE HAND AND SHALL NOT REQUIRE TIGHT GRASPING, PUNCHING, OR TWISTING OF THE WRIST. THE FORCE REQUIRED TO ACTIVATE CONTROLS SHALL BE NO GREATER THAN 5 POUNDS OF FORCE.
5. FAUCET CONTROLS AND OPERATING MECHANISMS FOR KITCHEN SINKS SHALL BE OPERABLE WITH ONE HAND AND SHALL NOT REQUIRE GRASPING, PUNCHING, OR TWISTING OF THE WRIST. THE FORCE REQUIRED TO ACTIVE FAUCET CONTROLS AND OPERATING MECHANISMS FOR KITCHEN SINKS SHALL BE NO GREATER THAN 5 PLF. LEVER-OPERATED, PUSH-TYPE, AND ELECTRONICALLY CONTROLLED MECHANISMS ARE EXAMPLES OF ACCEPTABLE DESIGNS, SELF CLOSING VALVES ARE ALLOWED OF THE FAUCET REMAINS OPEN FOR AT LEAST 10 SECONDS.
6. VENDING MACHINES SHALL BE INSTALLED IN COMPLIANCE.

HAZARDS & PROTRUDING OBJECTS

1. ABRUPT CHANGES IN LEVEL, EXCEPT BETWEEN A WALK OR SIDEWALK AND AN ADJACENT STREET OR DRIVEWAY, EXCEEDING 4" IN A VERT. DIMENSION, SUCH AS AT PLANTERS OR FOUNTAINS LOCATED IN OR ADJACENT TO WALKS, SIDEWALKS, OR OTHER PEDESTRIAN WAYS, SHALL BE IDENTIFIED BY WARNING CURBS PROJECTING AT LEAST 6" IN HEIGHT ABOVE THE WALK OR SIDEWALK SURFACE TO WARN THE BLIND OF A POTENTIAL DROP OFF.
2. WHEN A GUARDRAIL OR HANDRAIL IS PROVIDED, NO WARNING CURB IS REQUIRED WITH A GUIDE RAIL IS PROVIDED CENTERED 3" +/- 1" ABOVE THE SURFACE OF THE WALK OR SIDEWALK, THE WALK IS 5 PERCENT OR LESS GRADIENT, OR NO ADJACENT HAZARD EXISTS.
3. OBJECTS PROJECTING FROM WALLS WITH THEIR LEADING EDGES BETWEEN 27" AND 80" ABOVE THE FINISHED FLOOR SHALL PROTRUDE NO MORE THAN 4" INTO WALK, HALLS, CORRIDORS, PASSAGEWAYS, OR AISLES.
4. OBJECTS MOUNTED WITH THEIR LEADING EDGES AT OR BELOW 27" ABOVE THE FINISHED FLOOR MAY PROTRUDE ANY AMOUNT INTO WALKS, HALLS CORRIDORS, PASSAGEWAYS OR AISLES.
5. FREESTANDING OBJECTS MOUNTED ON POSTS OR PYLONS MAY OVERHAND 12" MAXIMUM FROM 27" TO 80" ABOVE THE GROUND OR FINISHED FLOOR.
6. PROTRUDING OBJECTS SHALL NOT REDUCE THE CLEAR WIDTH OF AN ACCESSIBLE ROUTE OR MANEUVERING SPACE.
7. WHERE A GUY SUPPORT IS USED PARALLEL TO A PATH OF TRAVEL, INCLUDING, BUT NOT LIMITED TO, SIDEWALKS, A GUY BRACE, SIDEWALK GUY OR SIMILAR DEVICE SHALL BE USED TO PREVENT AN OVERHANGING OBSTRUCTION AS DEFINED.
8. ANY OBSTRUCTION THAT OVERHANDS A PEDESTRIAN WAY SHALL BE A MINIMUM OF 80" ABOVE THE WALKING SURFACES MEASURED FROM THE BOTTOM OF THE OBSTRUCTION.
9. WALKS, HALLS, CORRIDORS, PASSAGEWAYS, AISLES OR OTHER CIRCULATION SPACES SHALL HAVE 80" MINIMUM CLEAR HEAD ROOM.

SIGNS & IDENTIFICATION

1. THE INTERNATIONAL SYMBOL OF ACCESSIBILITY SHALL BE THE STANDARD USED TO IDENTIFY FACILITIES THAT ARE ACCESSIBLE AND USABLE BY PHYSICALLY DISABLED PERSONS AS SET FORTH IN TITLE 24 AND AS SPECIFICALLY REQUIRED IN THIS SECTION.
2. THE INTERNATIONAL SYMBOL OF ACCESSIBILITY SHALL CONSIST OF A WHITE FIGURE ON A BLUE BACKGROUND. THE BLUE SHALL BE EQUAL TO COLOR NO. 15090 IN FEDERAL STANDARD 594B.
3. CHARACTERS ON SIGNS SHALL HAVE A WIDTH-TO-HEIGHT RATIO OF BETWEEN 3:5 AND 1:1 AND A STROKE WIDTH-TO-HEIGHT RATIO BETWEEN 1:5 AND 1:10.
4. CHARACTERS AND NUMBERS ON SIGNS SHALL BE SIZED ACCORDING TO THE VIEWING DISTANCE FORM WHICH THEY ARE TO BE READ. THE MINIMUM HEIGHT IS MEASURED USING AN UPPER CASE X. LOWER CASE CHARACTERS ARE PERMITTED. FOR SIGNS SUSPENDED OR PROJECTED ABOVE THE FINISH FLOOR IN COMPLIANCE. THE MINIMUM CHARACTER HEIGHT SHALL BE 3"
5. CHARACTERS, SYMBOLS AND THEIR BACKGROUND SHALL HAVE A NON-GLARE FINISH. CHARACTERS AND SYMBOLS SHALL CONTRAST WITH THEIR BACKGROUND, EITHER LIGHT CHARACTERS ON A DARK BACKGROUND OR DARK CHARACTERS ON A LIGHT BACKGROUND.
6. WHEN RAISED CHARACTERS OR SYMBOLS ARE USED, THEY SHALL CONFORM TO THE FOLLOWING:
   - A. LETTERS AND NUMBER ON SIGNS SHALL BE RAISED 1/32" MINIMUM AND SHALL BE SAN SERIF UPPER-CASE CHARACTERS ALONG WITH GRADE 2 BRAILLE.
   - B. RAISED CHARACTERS OR SYMBOLS SHALL BE A MINIMUM OF 5/8" HIGH.
   - C. PICTORIAL SYMBOL SIGNS (PICTOGRAMS) SHALL BE ACCOMPANIED BY THE EQUIVALENT VERBAL DESCRIPTION PLACED DIRECTLY BELOW THE PICTOGRAM. THE BORDER DIMENSION OF THE PICTOGRAM SHALL BE A MINIMUM OF 6" IN HEIGHT
7. CONTRACTED GRADE 2 BRAILLE SHALL BE USED WHEREVER BRAILLE SYMBOLS ARE SPECIFICALLY REQUIRED IN OTHER PORTIONS OF THESE REGULATIONS. DOTS SHALL BE 1/10" ON CENTERS IN EACH CELL WITH 2/10" SPACE BETWEEN CELLS. DOTS SHALL BE RAISED A MINIMUM OF 1/40" ABOVE THE BACKGROUND.
8. WHEN PERMANENT IDENTIFICATION IS PROVIDED FOR ROOMS AND SPACES OF A BUILDING OR SITE, RAISED LETTERS SHALL BE ACCOMPANIED BY BRAILLE IN CONFORMANCE WITH SECTION 1117B.5. SIGNS SHALL BE INSTALLED ON THE WALL ADJACENT TO THE LATCH SIDE OF THE DOOR. WHERE THERE IS NO WALL SPACE ON THE LATCH SIDE, INCLUDING DOUBLE LEAF DOORS, SIGNS SHALL BE PLACED ON THE NEAREST ADJACENT WALL, PREFERABLY ON THE RIGHT. MOUNTING HEIGHT SHALL BE 60" ABOVE THE FINISHED FLOOR TO THE CENTERLINE OF THE SIGN. MOUNTING LOCATION SHALL BE DETERMINED SO THAT A PERSON MAY APPROACH WITHIN 3" OF SIGN AGE WITHOUT ENCOUNTERING PROTRUDING OBJECTS OR STANDING WITHIN THE SWING OF A DOOR.
9. ALL BUILDING ENTRANCES THAT ARE ACCESSIBLE TO AND USABLE BY PERSONS WITH DISABILITIES AND AT EVERY MAJOR JUNCTION ALONG OR LEADING TO AN ACCESSIBLE ROUTE OF TRAVEL SHALL BE IDENTIFIED WITH A SIGN DISPLAYING THE INTERNATIONAL SYMBOL OF ACCESSIBILITY AND ADDITIONAL DIRECTIONAL SIGNS.
10. WHEN SIGNS DIRECT TO OR GIVE INFORMATION ABOUT PERMANENT ROOMS AND SPACE OF A BUILDING OR SITE, THEY SHALL COMPLY WITH SECTIONS 1117B.5.2, 1117B.5.3, 1117B.5.5, 1117B.5.6, 1117B.5.7. MEANS OF EGRESS SIGNS AND IDENTIFICATION FOR VISUAL EXIT SIGNS, GRAPHICS, ILLUMINATION, POWER SOURCE, TACTILE EXIT SIGNAGE, TACTILE STAIR LEVEL IDENTIFICATION AND SPECIAL EGRESS CONTROL DEVICES SHALL COMPLY WITH SECTION 1011.3, 1022.8, 1008.1.9.7, 1007.9, 1007.10, 1007.11, 1007.4

ELECTRICAL

1. THE CENTER OF ELECTRICAL AND COMMUNICATION SYSTEM RECEPTACLE OUTLETS SHALL BE INSTALLED NOT LESS THAN 18" ABOVE THE FLOOR OR WORKING PLATFORM.
2. THE CENTER OF THE GRIP OF THE OPERATING HANDLE OF CONTROLS OR SWITCHES INTENDED TO BE USED BY THE OCCUPANT OF THE ROOM OR AREA TO CONTROL LIGHTING AND RECEPTACLE OUTLETS, APPLIANCES, OR COOLING, HEATING, AND VENTILATION EQUIPMENT SHALL NOT BE MORE THAN 48" ABOVE THE FLOOR OR WORKING PLATFORM.

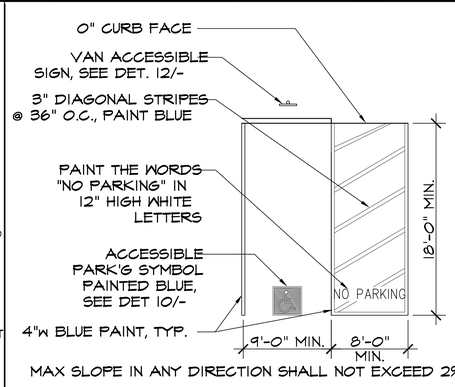

MAX SLOPE IN ANY DIRECTION SHALL NOT EXCEED 2%

SCALE: 1/8"=1'-0"

VAN ACCESSIBLE PARKING | 9

SIGNS MANUFACTURED BY "BEST GRAPHICS EAST," (800) 343-5022, 2 INDUSTRIAL PARKWAY, WOBURN, MASS 01801; OR EQUAL

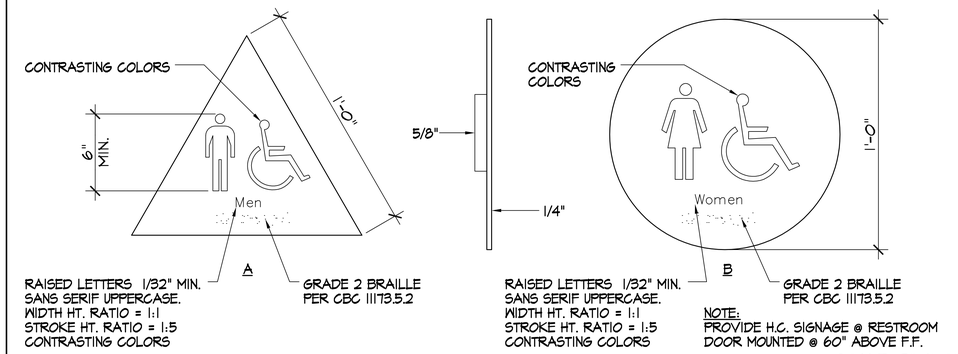

NOTE:
PROVIDE H.C. SIGNAGE @ RESTROOM DOOR MOUNTED @ 60" ABOVE F.F.

SCALE: 3"=1'-0"

RESTROOM SIGNAGE | 1

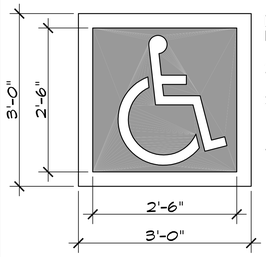

NOTES:
1. ALL STROKES TO BE 3" WIDE.
2. PROVIDE 2 COATS OF PAINT
3. WHITE SYMBOL OF ACCESSIBILITY ON A BLUE BACKGROUND
4. LOCATE SYMBOL AT REAR OF STALL ON STALL CENTERLINE

SCALE: NONE

H.C. STALL SIGN | 10

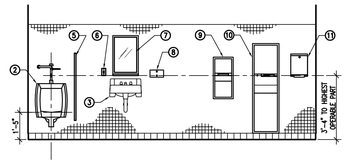

ACCESSIBLE RESTROOM ACCESSORY MOUNTING HIEGHTS AND CLEARANCES

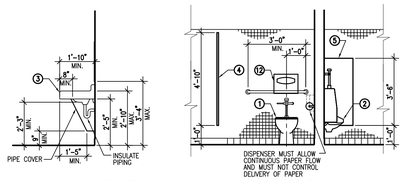

ACCESSIBLE RESTROOM FIXTURE MOUNTING HIEGHTS AND CLEARANCES

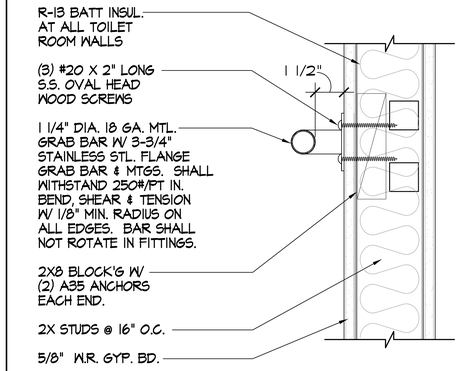

SCALE: 3"=1'-0"

GRAB BAR ANCHORAGE | 2

A ENTRY SIGN

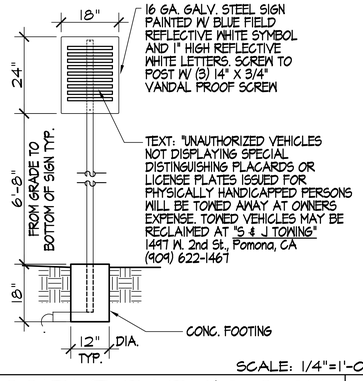

SCALE: 1/4"=1'-0"

ACCESSIBLE PARK'G SIGN | 11

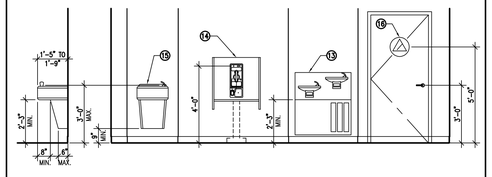

ACCESSIBLE INTERIOR MOUNTING HIEGHTS AND CLEARANCES

KEYNOTE LEGEND

1	TOILET	9	SANITARY NAPKIN DISPENSER
2	URINAL	10	PAPER TOWEL DISPENSER W/ TRASH RECEPTACLE
3	LAVATORY	11	PAPER TOWEL DISPENSER
4	TOILET STALL PARTITION	12	TOILET SEAT COVER DISPENSER
5	URINAL PARTITION	13	"HI/LOW" DRINKING FOUNTAIN
6	G.F.I. OUTLET	14	PUBLIC TELEPHONE
7	MIRROR	15	DRINKING FOUNTAIN
8	SOAP DISPENSER	16	ACCESSIBLE SIGNAGE

SCALE: 1/4"=1'-0"

ACCESSIBLE MT'G. HEIGHTS | 7

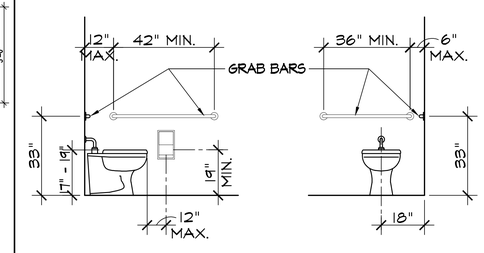

SCALE: 3/8"=1'-0"

GRAB BARS AT TOILET | 3

- CHARACTER WIDTH TO HEIGHT RATIO BETWEEN 3:5 AND 1:1
- CHARACTER STROKE WIDTH TO HEIGHT RATIO BETWEEN 1:5 AND 1:10
- CHARACTERS AND BACKGROUND SHALL HAVE AN EGGSHELL, MATTE, OR OTHER NON-GLARE FINISH
- CHARACTERS AND BACKGROUND SHALL CONTRAST, EITHER LIGHT CHARACTERS ON DARK BACKGROUND OR DARK CHARACTERS ON LIGHT BACKGROUND

SCALE: 1"=1'-0"

VAN ACCESSIBLE SIGN | 12

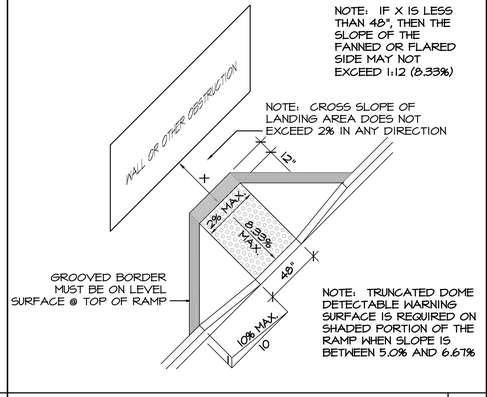

CURB RAMP DETAIL | 8

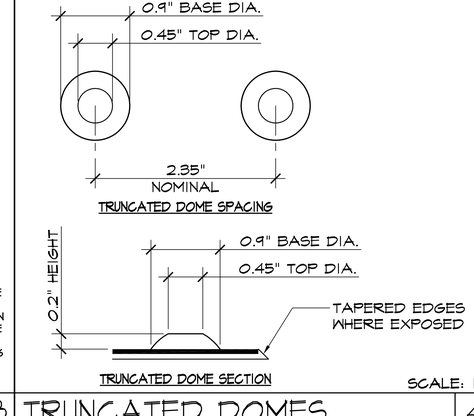

SCALE: 1:1

TRUNCATED DOMES | 4

THESE DRAWINGS AND SPECIFICATIONS ARE THE SOLE PROPERTY OF WHEELER & WHEELER ARCHITECTS, INC. AND SHALL NOT BE REPRODUCED WITHOUT WET STAMP AND SIGNATURE OF ARCHITECT OF RECORD. THE DRAWINGS AND SPECIFICATIONS NOT USED FOR ANY OTHER WORK, OR PORTION THEREOF, THAN THAT NOTED ON TITLE BLOCK, PLEASE CONTACT WHEELER & WHEELER ARCHITECTS AT 909.624.5095 IF ANY ATTEMPT IS MADE TO DO SO

© 2011 WHEELER & WHEELER ARCHITECTS, INC.

NO.	DATE	REVISION

WHEELER & WHEELER
ARCHITECTS
ARCHITECTURE ■ INTERIORS ■ PLANNING
133 South Spring Street, Claremont, California 91711 909-624-5095 FAX 909-621-7757
PAUL R. WHEELER AIA REGISTRATION NO. C12180 MARSHALL A. WHEELER AIA REGISTRATION NO. C14283

ACCESSIBILITY DETAILS & NOTES

TENANT IMPROVEMENT & EXTERIOR FACADE IMPROVEMENTS for:

Get Air

S.E. Quadrant, Pomona 60 FWY at Corona Expressway
Pomona, California 91766

APN NO. 8331-016-021

DATE	JOB NO.	DRAWN BY
10.01.2014	AIR-2521	-

DRAWING NO. ADA2

ABBREVIATIONS

SYMBOL	DESCRIPTION
@	AT
AB	ANCHOR BOLT
ACI	AMERICAN CONCRETE INSTITUTE
ADJ	ADJACENT
ALT	ALTERNATE
ALUM	ALUMINUM
APA	AMERICAN PLYWOOD ASSOCIATION
ARCH	ARCHITECTURAL
ASTM	AMERICAN SOCIETY FOR TESTING MATERIALS
BLCKG	BLOCKING
BOT	BOTTOM
BM	BEAM
BTWN	BETWEEN
CANT	CANTILEVER
CIP	CAST IN PLACE
CJ	CONTROL/CONSTRUCTION JOINT
CL	CENTERLINE
CLR	CLEAR
COL	COLUMN
CONC	CONCRETE
COND	CONDITION
CONN	CONNECTION
CONST	CONSTRUCTION
CONT	CONTINUOUS
DET	DETAIL
DIA	DIAMETER
DF	DOUGLAS FIR
DL	DEAD LOAD
DEG	DEGREE
DBL	DOUBLE
DIM	DIMENSION
DWG	DRAWING
MWT	MANUF'D WOOD TRUSS(ES)
EA	EACH
EF	EACH FACE
EL	ELEVATION
EQ	EQUAL
ES	EACH SIDE
EW	EACH WAY
EN	EDGE NAIL
EOS	EDGE OF SLAB
EX	EXISTING
FDN	FOUNDATION
FIN	FINISH
FLR	FLOOR
FO	FACE OF
FT	FEET
FTG	FOOTING
JST	JOIST
HDR	HEADER
GLB	GLULAM BEAM
HOR	HORIZONTAL
HT	HEIGHT
K	KING
LL	LIVE LOAD
LT	LENGTH
LONG'L	LONGITUDINAL
MANUF'D	MANUFCTURED
MAX	MAXIMUM
MECH	MECHANICAL
MIN	MINIMUM
MULT	MULTIPLE
NTS	NOT TO SCALE
NO (#)	NUMBER
OC	ON CENTER
OPNG	OPENING
PL	PLATE
PLY	PLYWOOD
PCF	POUNDS PER CUBIC FOOT
PSF	POUNDS PER SQUARE FOOT
PSI	POUNDS PER SQUARE INCH
PST	POST
PT	PRESSURE TREATED
RFTR	RAFTER
RT	RIGHT
REINF	REINFORCEMENT
REQ'D	REQUIRED
RR	ROOF RAFTER
SCHED	SCHEDULE
SHEATHG.	SHEATHING
S.P.N.	SILL PLATE NAILING
SHT	SHEET
SPC	SPACE
SPECS	SPECIFICATIONS
STRUCT	STRUCTURAL/STRUCTURE
STD	STANDARD
SQ	SQUARE
SYMM	SYMMETRICAL
THK	THICK
TOC	TOP OF CONCRETE
TRANS	TRANSVERSE
TYP	TYPICAL
VERT	VERTICAL
UBC	UNIFORM BUILDING CODE
UNO	UNLESS NOTED OTHERWISE
W/	WITH
W/O	WITHOUT
WWF	WELDED WIRE FABRIC
WS	WELDED STUD
WT	WEIGHT
H & L	HIGH AND LOW HEADER

GENERAL

A. THE GENERAL NOTES AND DETAILS SHALL APPLY TO ALL STRUCTURAL WORK EXCEPT WHERE DETAILS OR NOTES ARE SPECIFICALLY SHOWN ON PLANS.

B. ITEMS IN THE PROJECT SPECIFICATIONS, BUT NOT SHOWN ON THE DRAWINGS, SHALL BE CONSIDERED AS BEING PART OF THE DRAWINGS.

C. RESOLVE ALL CONFLICTS AND AMBIGUITIES ON PLANS AND SPECIFICATIONS WITH THE ENGINEER BEFORE PROCEEDING WITH MATERIAL FABRICATION AND CONSTRUCTION.

D. THE STRUCTURAL DRAWINGS SHOW ONLY THE BASIC STRUCTURE. REFER TO ARCHITECTURAL DRAWINGS FOR NON-STRUCTURAL ITEMS.

E. THE GENERAL CONTRACTOR SHALL VERIFY ALL DIMENSIONS AND SITE CONDITIONS BEFORE STARTING WORK. DIMENSIONS SHALL TAKE PRECEDENCE OVER SCALES SHOWN ON DRAWINGS.

F. BUILDING DEPARTMENT APPROVAL DOES NOT SUPERSEDE ANY PLAN AND SPECIFICATION REQUIREMENT.

G. SEE ARCHITECTURAL, ELECTRICAL AND MECHANICAL PLANS FOR PITS, TRENCHES, ROOF AND FLOOR OPENINGS, DEPRESSIONS ETC. NOT SHOWN ON THE STRUCTURAL PLANS.

H. NO VIBRATION EFFECTS OF EQUIPMENT HAVE BEEN CONSIDERED IN THE STRUCTURAL DESIGN.

I. TEMPORARY SUPPORT, BRACING, SHORING ETC. REQUIREMENTS OF THE STRUCTURE AND STABILITY OF THE STRUCTURE PRIOR TO THE APPLICATION OF THE ROOF, FLOOR AND SHEAR WALL DIAPHRAGMS IS THE COMPLETE RESPONSIBILITY OF THE CONTRACTOR AND SUBCONTRACTORS AND HAS NOT BEEN CONSIDERED BY THE ENGINEER.

CODE

A. PROJECT IS DESIGNED IN ACCORDANCE WITH THE 2013 CALIFORNIA BUILDING CODE.

B. ALL WORK SHALL CONFORM TO THE MINIMUM STANDARDS OF THE 2013 CBC, AND ANY OTHER REGULATING AGENCIES WHICH HAVE AUTHORITY OVER ANY PORTION OF THE WORK, INCLUDING THE STATE OF CALIF. DIVISION OF INDUSTRIAL SAFETY, AND THOSE CODES AND STANDARDS LISTED IN THESE NOTES AND SPECIFICATIONS.

DESIGN CRITERIA

A. DESIGN VERTICAL LOADS 2013 CBC
   1. ROOF: DEAD LOAD = 15 PSF
      LIVE LOAD = 20 PSF
      SNOW LOAD = 0 PSF
   2. FLOOR : DEAD LOAD = 22 PSF
      LIVE LOAD = 100 PSF

B. DESIGN LATERAL LOADS 2013 CBC
   1. WIND:
      a. BASIC WIND SPEED 110 MPH.
      b. EXPOSURE C
      c. Kz = 0.9
      d. INTERNAL PRESSURE COEFFICIENT: q_h= 18.5 PSF
   2. SEISMIC
      a. IMPORTANCE FACTOR 1.0.
      b. MAPPED Ss = 2.689 g : S1 = 1.0050 g
      c. SITE CLASS B
      d. Sds =1.7921 Sd1= 1.0050
      e. SEISMIC DESIGN CATEGORY D
      f. BASIC SEISMIC-FORCE-RESISTING SYSTEM: PLYWOOD SHEAR WALLS
      g. DESIGN BASE SHEAR V= 0.2758 W (PLYWD SHEAR WLLS)
      h. Cs = 0.2758 PLYWD
      i. R = 6.5 PLYWOOD SHEAR WALLS
      j. EQUIVALENT LATERAL FORCE PROCEDURE USED

C. FLOOD LOAD: N/A

D. SPECIAL LOADS: N/A

SOIL AND FOUNDATION

A. THE FOUNDATION DESIGN IS BASED ON CBC DEFAULT STIFF SOIL TYPE D 2013 CBC

B. SOIL BEARING = 1500 PSF FOR MIN 15" WIDE X 18" DEEP CONTINUOUS FOOTINGS

C. ALL SITE PREPARATION, EXCAVATION, BACKFILL AND COMPACTION SHALL BE DONE UNDER THE SUPERVISION OF THE GEOTECHNICAL ENGINEER.

GEOTECHNICAL OBSERVATION & TEST'G

A. DURING AND FOLLOWING REMEDIAL REMOVALS.
B. DURING FILL PLACEMENT.
C. DURING AND AFTER FOUNDATION AND R-WALL FOOTING EXCATIONS.
D. DURING INSTALLATION OF SUBDRAINS.
E. DURING BACKFILL BEHIND RETAINING STRUCTURES.
F. DURING UTILITY TRENCH EXCAVATIONS AND BACKFILL.
G. WHEN ANY UNUSUAL OR UNEXPECTED GEOTECHNICAL CONDITIONS ARE ENCOUNTERED DURING GRADING AND CONSTRUCTION.

CONCRETE

A. AT 28 DAYS, ALL CONCRETE SHALL HAVE A MINIMUM COMPRESSIVE STRENGTH OF 2,500 PSI WITH SPECIAL INSPECTION REQ'D PER 2013 CBC.

B. CEMENT SHALL CONFORM TO ASTM C150, TYPE II, UNO. .45 WATER CEMENT RATIO PER 2013 CBC

C. AGGREGATES SHALL CONFORM TO ASTM C33.

D. DRYPACK SHALL BE COMPOSED OF ONE PART PORTLAND CEMENT TO NOT MORE THAN THREE PARTS SAND.

E. ANCHOR BOLTS, DOWELS AND ALL EMBEDDED ITEMS SHALL BE SECURELY TIED IN PLACE PRIOR TO CASTING CONCRETE.

F. CONCRETE SHALL BE CURED BY KEEPING CONTINUOUSLY WET FOR 10 DAYS OR BY AN APPROVED CURING COMPOUND.

G. SEE ARCHITECTURAL, MECHANICAL, ELECTRICAL AND PLUMBING PLANS FOR MISCELLANEOUS EMBEDDED ITEMS AND FLOOR DEPRESSIONS, PITS, ETC.

H. SEE ARCHITECTURAL PLANS FOR LOCATION OF HORIZONTAL CONSTRUCTION/CONTROL JOINTS, ETC. FOR CONCRETE SLABS ON GRADE.

I. ALL CONCRETE FORMS AND FALSE WORK SHALL REMAIN IN PLACE UNTIL CONCRETE REACHES SPECIFIED STRENGTH.

J. HORIZONTAL CONSTRUCTION JOINTS SHALL BE ROUGHENED TO 1/4" AMPLITUDE, REMOVE LAITANCE BELOW THE SURFACE AND CLEAN BEFORE PLACEMENT OF ADJACENT CONCRETE.

TIMBER

A. ALL STRUCTURAL LUMBER SHALL BE DOUGLAS FIR/LARCH WITH THE FOLLOWING GRADES, UNO:
   1. STUDS, PLATES & BLCK'G: STUD GRADE OR BETTER, DOUGLAS FIR/LARCH.
   2. JOIST/RAFTERS:NO. 1 OR BETTER
   3. 4X: NO. 2 OR BETTER
   4. 6X & GRT: NO. 1 OR BETTER
   5. POST/TIMBERS: NO.2
   6. COM. DEX: FB=1450 PSI
   7. BOARDS, STRIPPING: SUITABLE FOR INTENDED USE

B. ALL STRUCTURAL LUMBER SHALL BE GRADED IN ACCORDANCE WITH THE STANDARD GRADING RULE NO. 16 FOR WEST COAST LUMBER.

C. ALL TIMBER BEARING ON CONCRETE OR MASONRY SHALL BE PRESSURE TREATED DOUGLAS FIR OR FOUNDATION GRADE REDWOOD.

D. HOLES FOR BOLTS SHALL BE DRILLED WITH A BIT 1/32 TO 1/16 INCH LARGER THAN THE NOMINAL BOLT DIAMETER, INSPECTOR VERIFY.

E. ALL BOLTS SHALL BE RE-TIGHTENED PRIOR TO APPLICATION OF PLYWOOD, PLASTER, ETC, INSPECTOR VERIFY.

F. STRUCTURAL MEMBERS SHALL NOT BE CUT FOR PIPES, ETC. UNLESS SPECIFICALLY NOTED OR DETAILED.

G. CROSS BRIDGING SHALL BE PROVIDED AT 8 FEET MAXIMUM ON CENTER FOR ALL ROOF AND FLOOR JOIST OVER 10" IN DEPTH. USE 2X3, SOLID BLOCKING OR AN ICBO APPROVED METAL BRIDGING.

H. STRUCTURAL PLYWOOD SHALL BE:
   ROOF: USE 1/2" APA RATED SHEATHING, EXP.1, PS 1-95 OR PS2-92
   PI 24/16, W/ 8D NAILS AT 6" O/C BOUNDARY AND EDGES, 12" O/C FIELD.
   FLOOR: USE 3/4" APA RATED STURD-I-FLOOR,T & G, PS 1-95 OR PS2-92
   PI 48/24, W/ 10D NAILS AT 4" O/C BOUNDARY & EDGES 10" O/C FIELD, BLOCKED DIAPHRAGM.
   SHEAR: USE APA RATED SHEATHING, EXP.1,
   PS 1-83, PI 24/0, W/ NAILS PER SHEAR SCHEDULE.
   TYP NAILING UNO ON PLANS, SEE FRMG FOR DIAPHRAGM BLCKG REQ'D.
   OSB SHEATHING MAY BE USED, SUBMITTED SPEC'S PRIOR TO CONSTRUCTION.

I. ALL BOLT BEARING ON TIMBER SHALL HAVE STANDARD CUT WASHERS UNDER HD & NUT:1/2" DIA-2X2X3/16; 5/8" DIA-2.5X2.5X1/4; 3/4 DIA-2.75X2.75X5/16.

J. ALL STEEL TIMBER CONNECTORS SHALL BE SIMPSON OR EQ PER ICBO REPORT. FASTENERS FOR PT SHALL BE HOT DIPPED ZINC-COATED GALVANIZED STEEL STAINLESS STEEL, SILICON BRONZE OR COPPER

K. ALL NAILING SHALL BE PER 2013 CBC, TABLE 2304.9.1

L. ALL EXTERIOR WALLS SHALL BE SECURED WITH A MINIMUM OF 5/8" DIAMETER ANCHOR BOLTS 72" O/C AND 12" MAX FROM WALL ENDS. INTERIOR NON-BEARING, NON-SHEAR WALLS MAY BE SECURED WITH SHOT PINS PER MANUFACTURERS SPECIFICATIONS AT 48" O/C MAXIMUM SPACING, ALL WASHERS 3"X3"X0.229" THICK PLATE WASHERS, MIN 7" EMBEDDED INTO CONCRETE.

M. ALL SHOP DRAWINGS SHALL BE REVIEWED BY CONTRACTOR AND ARCHITECT PRIOR TO SUBMITTAL TO ENGINEER FOR APPROVAL.

N. ALL STEEL HOLDOWNS AND STRAPS SHALL BE FASTENED WITH 4X4 POST, UNO.

O. ALL WALLS ON WOOD FLOORS SHALL BE SUPPORTED BY BEAM, MULT-JOIST OR SOLID BLOCKING.

P. ALL ISOLATED POST AND BEAMS SHALL HAVE METAL CAPS AND BASES.

Q. ALL BEAMS SHALL HAVE FULL BEARING SUPPORT.

R. NON-BEARING, BALLOON FRAMED WALLS:
   1. (1)2X4 AT 16" O/C 14'-0" MAXIMUM UNSUPPORTED HEIGHT.
   2. (1)2X6 AT 16" O/C 20'-0" MAXIMUM UNSUPPORTED HEIGHT.
   3. ALL STUDS WALL 2X4 AT 16" OC, UNO.
   4. NAIL MULTIPLE STUDS TOGETHER WITH 16D NAILS AT 16" O/C, UNO.

S. STRUCTURAL WOOD PANELS, SHEAR WALLS SHALL BE COVERED W/ MIN 2 LAYERS OF #15 FELT UNDERLAYMENT PRIOR TO PLAC'G FINISH MATERIAL.

T. **NAIL SPECIFICATIONS**

NAIL SPECIFIED	SHANK SIZE	SHANK LENGTH
16D COMMON	0.162"	3.5"
10D COMMON	0.148"	3"
8D COMMON	0.131"	2.5"

U. ALL FASTENERS IN CONTACT WITH PRESSURE-TREATED, FIRE-RETARDANT AND TREATED WOOD SHALL BE OF HOT-DIPPED, ZINC-COATED GALVANIZED STEEL STAINLESS STEEL, SILICON BRONZE OR COPPER.

V. PARALLAM PSL DESIGN PER ICC ESR-1387

REINFORCING STEEL

A. ALL REINFORCING SHALL BE ASTM A615, GRADE 60 FOR #5 & SMALLER; GRADE 60 ALL OTHERS.

B. WELDED WIRE FABRIC SHALL BE ASTM A185, WWF6X6-W4XW4 LAP 1-1/2 SPACES, WITH A MINIMUM OF 9".

C. BAR LAP AND SPLICES SHALL BE OF 30 BAR DIAMETER OR 2 FEET MINIMUM.

D. ALL BARS SHALL BE DEFORMED PER ASTM A305.

E. ALL BARS SHALL BE CLEAN OF LOOSE FLAKY RUST, GREASE, OR OTHER MATERIAL LIKELY TO IMPAIR BOND.

F. ALL REINFORCING BARS SHALL BE ACCURATELY AND SECURELY TIED HELD IN PLACE PRIOR TO CASTING CONCRETE.

G. UNLESS OTHERWISE SHOWN ON THE PLANS, MINIMUM CONCRETE PROTECTION FOR REINFORCING STEEL SHALL BE:
   1. 3" FOR SURFACES CAST AGAINST EARTH.
   2. 2" FOR FORMED SURFACES EXPOSED TO EARTH AND WEATHER.
   3. 1-1/2" FOR ALL OTHER SURFACES.

GLULAM

A. GLUED LAMINATED BEAMS SHALL BE 24F-V4(SIMPLE SPAN),24F-V8(CANT SPAN) DOUGLAS FIR PER AITC 110.

B. INSTALLATION SHALL COMPLY WITH RECOMMENDATIONS OF ANSI/AITC A190.1 STRUCTURAL GLUED LAMINATED TIMBER.

C. EACH GLUED LAMINATED BEAM SHALL BE STAMPED WITH AN IDENTIFYING NUMBER AND SHALL BE ACCOMPANIED BY A CERTIFICATE

D. SUBMIT CERTIFICATION OF INSPECTION DURING FABRICATION FROM AN APPROVED TESTING AGENCY/LABORATORY TO DEVELOPMENT SERVICES DEPARTMENT, BUILDING DIVISION FOR ALL GLU-LAMINATED BEAMS AND LUMBER USED. CERTIFICATE MUST INCLUDE AND SPECIFY THE SIZE, GRADE, SPECIES, CAMBER AND STRUCTURAL STRESS PROPERTIES IN PSI, NOTCHES, HOLES, TAPERS OR ANY STRUCTURAL STRESS CHARACTERISTICS OR IMPAIRMENTS PER UBC SECTION 5004, A.B.

E. ALL GLU-LAM BEAMS AND ALL STRUCTURAL WOOD MEMBERS SHALL NOT BE NOTCHED, DRILLED, TAPERED DAPPED, OR CUT IN ANY WAY EXCEPT AS SHOWN ON THE DRAWINGS. ALL CUTS (EXCEPT FOR ENDS LEFT WILD) SHOWN ON THE DRAWINGS SHALL BE FACTORY MADE AND NOT CUT IN THE FIELD. IF THE CONTRACTOR NEEDS TO MAKE ANY ADDITIONAL FIELD CUTS, HE MUST GET PERMISSION FROM THE ENGINEER IN WRITTING, WITH CALCULATIONS FOR JUSTIFICATION.

PARALLAM/MICROLLAM LVL SPECIFICATIONS

A. USE 2.0E FOR ALL PARALLAM PSL AND SHALL COMPLY WITH NES REPORT NO. NER-481 SEE STANDARD SPECIFICATIONS AND INSTALLATION GUIDE PER TJI - PARALLAM BEAM.

B. USE 1.9E FOR ALL MICROLLAM LVL AND SHALL COMPLY WITH NES REPORT NO. NER-481 SEE STANDARD SPECIFICATIONS AND INSTALLATION GUIDE PER TJI - PARALLAM BEAM.

C. USE EXTERIOR RATED ALL PARALLAM PSL.

DESIGN- BUILD ITEMS AND REQUIREMENTS

A. THE GENERAL CONTRACTOR SHALL SUBMIT PLANS, DETAILS AND CALCULATION FOR ALL DESIGN-BUILD ITEMS, TO THE BUILDING DEPARTMENT, THE ARCHITECT AND STRUCTURAL ENGINEER FOR REVIEW PRIOR TO CONSTRUCTION.

B. THE PLANS, DETAILS AND CALCULATIONS AS NECESSARY FOR DESIGN-BUILD ITEMS, SHALL BE SIGNED BY A CIVIL OR STRUCTURAL ENGINEER, HOLDING A VALID LICENSE IN THE STATE OF CALIF. HE SHALL BE RESPONSIBLE FOR ANY REQUIREMENTS OF THE BUILDING DEPARTMENT.

C. DESIGN-BUILD ITEMS SHALL BE DESIGNED BY OTHERS THE GENERAL CONTRACTOR SHALL COORDINATE WITH OTHER TRADES AND ARCHITECT:

D. ANY STRUCTURE THAT IS NOT SHOWN ON THE STRUCTURAL DRAWINGS, BUT IS REQUIRED BY OTHER DISCIPLINES SUCH AS ARCHITECTURAL, MECHANICAL, ELECTRICAL, LANDSCAPE, ETC...

SPECIAL INSPECTION

A. ALL EPOXY ANCHOR BOLTS REQUIRE SPECIAL INSPECTION.
B. ALL FIELD WELDING REQUIRE SPECIAL CONTINUOUS INSPCTION PER 2013 CBC
C. TESTING OF WELDED CONNECTIONS SHALL BE PER CBC 1703 BY ULTRASONIC TESTING OR BY RADIOGRAPHY.
D) THE FOLLOWING ITEMS REQUIRE CONTINUOUS SPECIAL INSPECTION:
   1. STEEL MOMENT FRAMES & SRSS PART OF FRAME DURING INSTALLATION.
   2. GRADE BEAMS

FS01

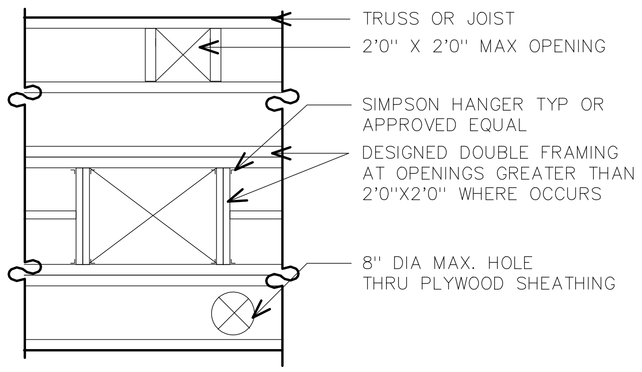

STEEL STUD WALLS

WALL SECTION	SECTION REQ'D, UNO
TOP TRACK	400T200-43 600T200-54 800T200-54
BOTTOM TRACK	400T200-43 600T200-54 800T200-54
2X4 WALLS	400S200-43
2X6 BEARING AND SHEAR WALLS	600S200-54
2X8 BEARING AND SHEAR WALLS	800S200-54

ALL RADIUS TOP AND BOTTOM TRACKS SHALL BE A SINGLE CONTINUOUS SECTION, NOT A SEGMENTED SECTION

ICC ESR REPORT NUMBER OR EQUAL

MEMBER DEPTH INCHES → 600S200-68
STYLE: S-STUD, T-TRACK
FLANGE WIDTH INCHES
MATERIAL THICKNESS MILS

ALL COLD-FORMED STEEL (CFS) ASTM A 1003 GRADE 33, TYPE H FOR WALL STUDS
TOP AND BOTTOM TRACKS ASTM A 653, SS, GRADE 50 STEEL WITH A MIN G60 GALVANIZATION COASTING
DESIGNATION IN ACCORDANCE WITH ASTM A 653

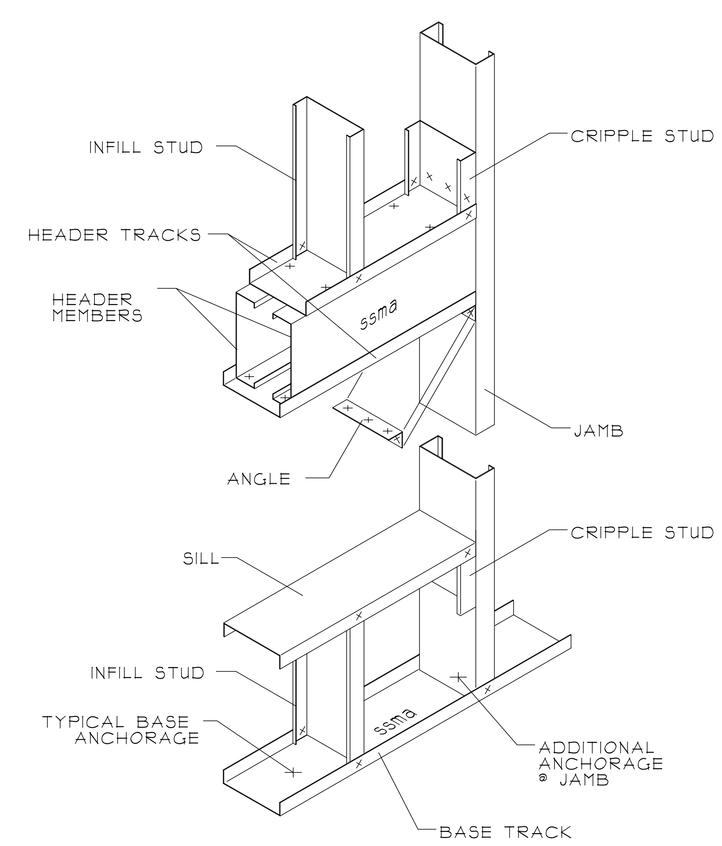

REVISION	DATE	BY

REGISTERED PROFESSIONAL ENGINEER SCOTT JOHN SANDERS S 3902 EXP. 6-30-16 STRUCTURAL STATE OF CALIFORNIA

Wednesday, December 2, 2015

Scott J. Sanders, SE INC.
Consulting Structural Engineers
Arcadia, California Washington
• PHONE (626) 825-1005 • FAX (626) 825-7880 • EMAIL sjs@sandersinc.com

THIS DRAWING IS AN INSTRUMENT OF SERVICE AND THE PROPERTY OF SCOTT J SANDERS, SE. USE OF THIS DRAWING AND ALL REPRODUCTIONS SHALL BE RESTRICTED TO THIS PROJECT SITE FOR WHICH THIS DRAWING WAS PREPARED, NOT BE USED UNLESS PROPERLY SEALED AND APPROVED. PUBLICATION OF THIS DRAWING BY ANY METHOD IN WHOLE OR PART IS PROHIBITED WITHOUT WRITTEN PERMISSION OF SCOTT J SANDERS, SE. WHERE A CONTRACTORS NAME APPEARS ON THE DRAWING, ALL WORK SHALL BE COMPLETED BY SAID CONTRACTOR EXCEPT BY AGREEMENT WITH SAID CONTRACTOR.

CAT WALKS AND RAMPS AT
GET AIR
2735 SOUTH TOWNE AVE.
POMONA, CA 91766

STRUCTURAL GENERAL NOTES

DRAWN	SJS
CHECKED	SJS
DATE	10-28-15
SCALE	AS NOTED
JOB NO.	2717
SHEET	SN1.0
	STRUCTURAL

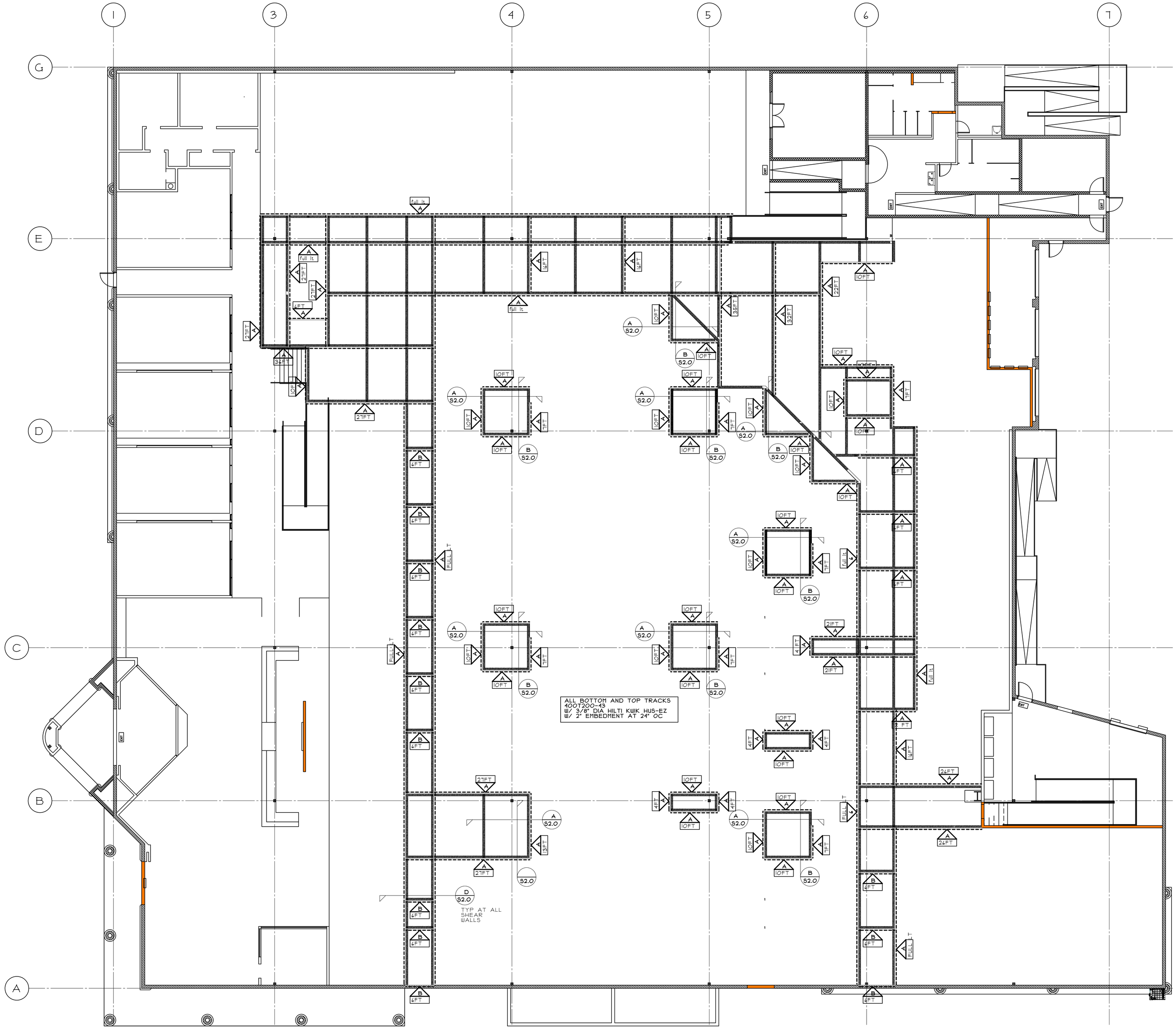

FOUNDATION PLAN

SCALE: 1/8" = 1'0"

SHEAR WALLS SCHDEULE

WALL A - 5/8" THICK GYPSUM BOARD ONE SIDE
W/ STEEL STUDS AT 16" OC, #8 SCREWS AT 4"OC
PANEL EDGES AND 6" OC FIELD
W/ 3/8" DIA HILTI KWIK HUS-EZ W/
2" EMBEDMENT AT 24" OC

WALL B - 5/8" THICK GYPSUM BOARD TWO SIDES
W/ STEEL STUDS AT 16" OC, #8 SCREWS AT 4"OC
PANEL EDGES AND 6" OC FIELD
W/ 3/8" DIA HILTI KWIK HUS-EZ W/
2" EMBEDMENT AT 24" OC

REVISION	DATE	BY

REGISTERED PROFESSIONAL ENGINEER
SCOTT JOHN SANDERS
S 3902
EXP. 6-30-16
STRUCTURAL
STATE OF CALIFORNIA

Wednesday, December 2, 2015

Scott J. Sanders, SE INC.
Consulting Structural Engineers
Arizona, California, Hawaii, Nevada, Washington
• PHONE (909) 625-1900 • FAX (909) 634-7800 • EMAIL sjs@sjsanderscSE.com
Glendora S.E.
Glendora S.E.

THIS DRAWING IS AN INSTRUMENT OF SERVICE AND THE PROPERTY OF SCOTT J. SANDERS, SE. THE USE OF THIS DRAWING AND ALL REPRODUCTIONS SHALL BE RESTRICTED TO THE ORIGINAL SITE FOR WHICH IT WAS PREPARED AND SHALL NOT BE USED UNLESS PROPERLY SEALED AND APPROVED. PUBLICATION OF THIS DRAWING BY ANY METHOD IN WHOLE OR PART IS PROHIBITED WITHOUT WRITTEN PERMISSION OF SCOTT J. SANDERS, SE. WHEN THE SANDERS CONTRACTORS NAME APPEARS ON THE DRAWING, ALL WORK SHALL BE COMPLETED BY SAID CONTRACTOR, EXCEPT BY AGREEMENT WITH SAID CONTRACTOR.

CAT WALKS AND RAMPS AT

GET AIR
2135 SOUTH TOWNE AVE.
POMONA, CA 91766

DRAWN	SJS
CHECKED	SJS
DATE	10-28-15
SCALE	AS NOTED
JOB NO.	2717
SHEET	S1.0
	STRUCTURAL

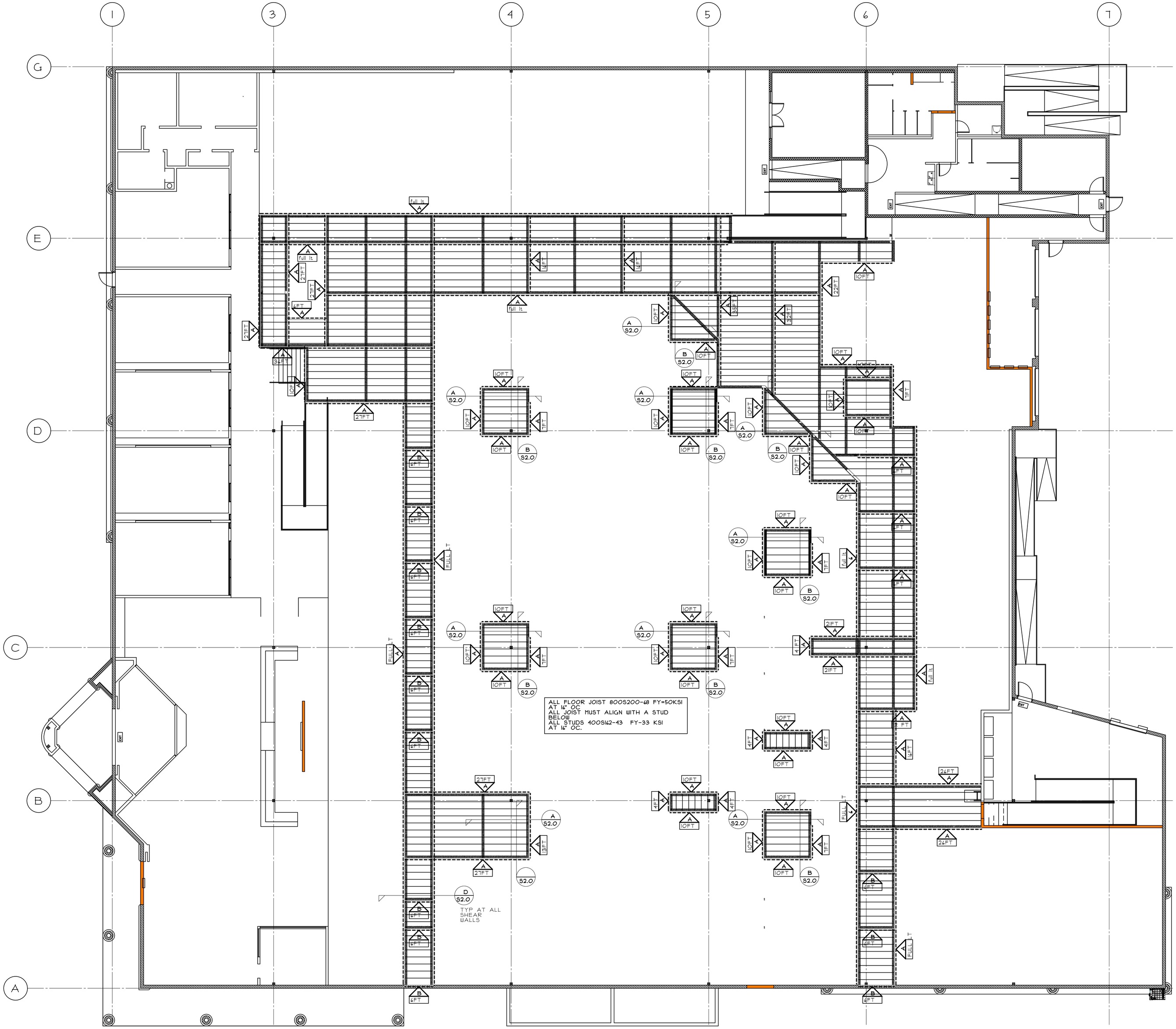

FIRST FLOOR FRAMING & SHEAR PLAN

SCALE: 1/8" = 1'0"

SHEAR WALLS SCHDEULE

WALL A - 5/8" THICK GYPSUM BOARD ONE SIDE
W/ STEEL STUDS AT 16" OC, #8 SCREWS AT 4"OC
PANEL EDGES AND 6" OC FIELD
W/ 3/8" DIA HILTI KWIK HUS-EZ W/
2" EMBEDMENT AT 24" OC

WALL B - 5/8" THICK GYPSUM BOARD TWO SIDES
W/ STEEL STUDS AT 16" OC, #8 SCREWS AT 4"OC
PANEL EDGES AND 6" OC FIELD
W/ 3/8" DIA HILTI KWIK HUS-EZ W/
2" EMBEDMENT AT 24" OC

REVISION	DATE	BY

REGISTERED PROFESSIONAL ENGINEER
SCOTT JOHN SANDERS
S 3902
EXP. 6-30-16
STRUCTURAL
STATE OF CALIFORNIA

Wednesday, December 2, 2015

Scott J. Sanders, SE INC.
Consulting Structural Engineers
Arizona, California, Hawaii, Nevada, Washington
• PHONE (909) 625-1900 • FAX (909) 1234 7890 • EMAIL sjs@scjsanderscSE.com
Glendora S.E.
Glendora S.E.

THIS DRAWING IS AN INSTRUMENT OF SERVICE AND IS THE PROPERTY OF THE ARCHITECT. RE-USE OF THIS DRAWING AND ALL REPRODUCTIONS SHALL BE RESTRICTED TO THE ORIGINAL SITE FOR WHICH IT WAS PREPARED AND SHALL NOT BE USED UNLESS PROPERLY SEALED AND APPROVED. PUBLICATION OF THIS DRAWING BY ANY METHOD IN WHOLE OR PART IS PROHIBITED WITHOUT WRITTEN PERMISSION OF SCOTT J. SANDERS. UNLESS OTHERWISE CONTRACTORS NAME APPEARS ON THE DRAWING, ALL WORK SHALL BE COMPLETED BY SAID CONTRACTOR, EXCEPT BY AGREEMENT WITH SAID CONTRACTOR.

CAT WALKS AND RAMPS AT

GET AIR
2135 SOUTH TOWNE AVE.
POMONA, CA 91766

FRAMING & SHEAR PLAN

DRAWN	SJS
CHECKED	SJS
DATE	10-28-15
SCALE	AS NOTED
JOB NO.	2717
SHEET	S1.1
	STRUCTURAL

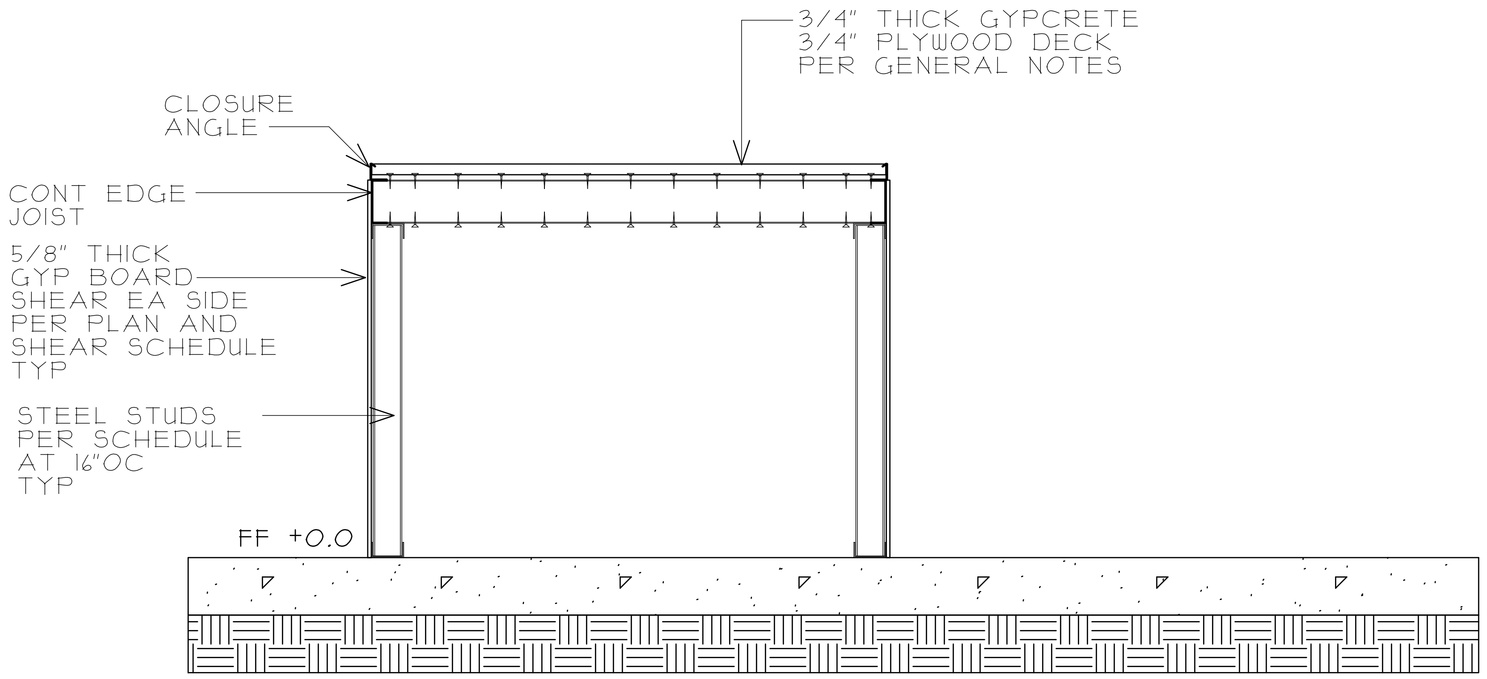

D/S2.0 TYPICAL SHEAR WALL ELEVATION

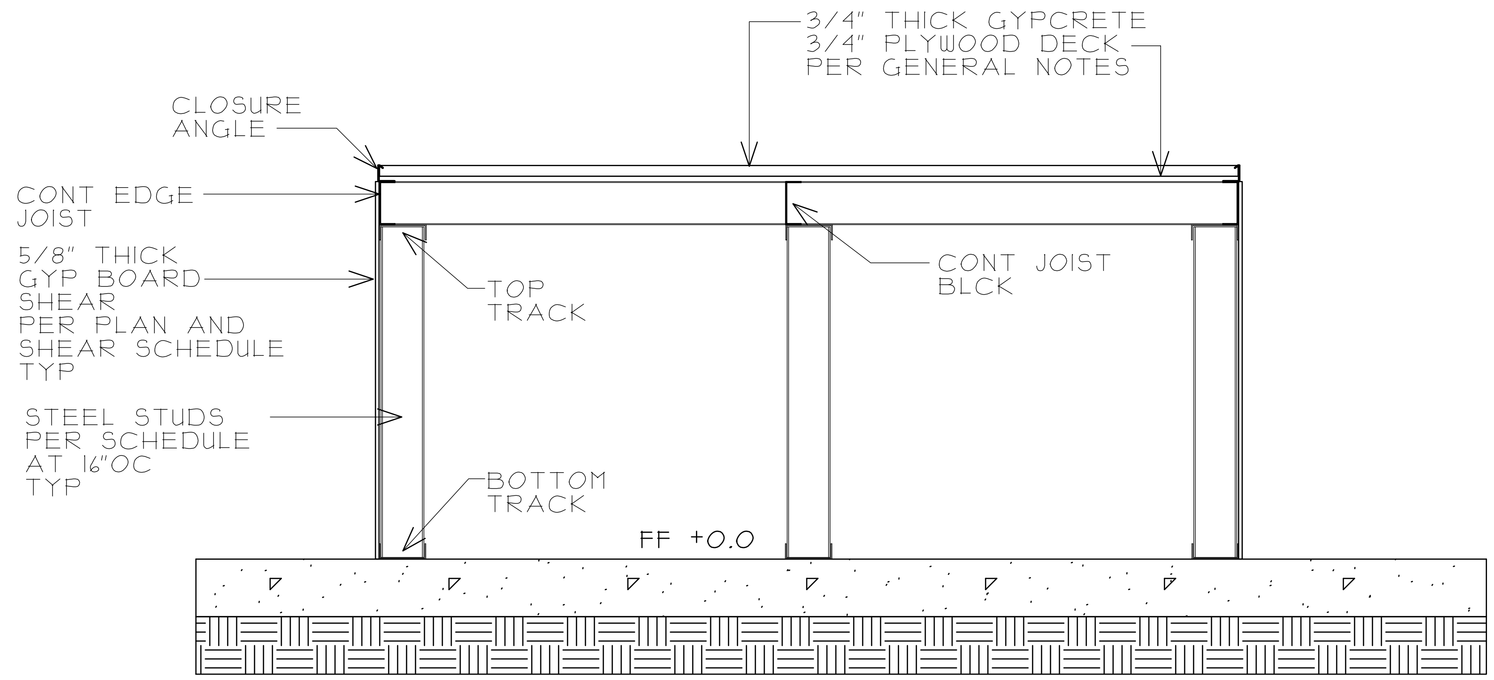

A/S2.0

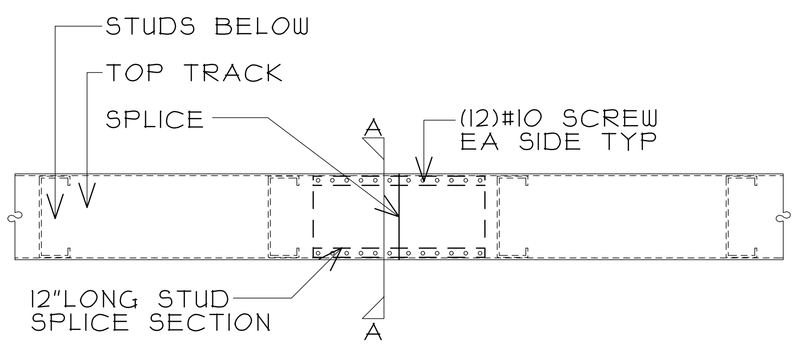

PLAN VIEW

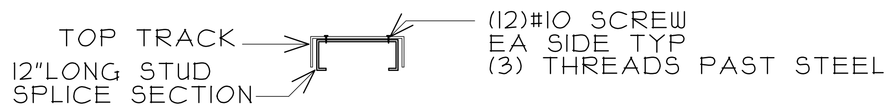

SECTION A-A

E/S2.0 TOP TRACK SPLICE

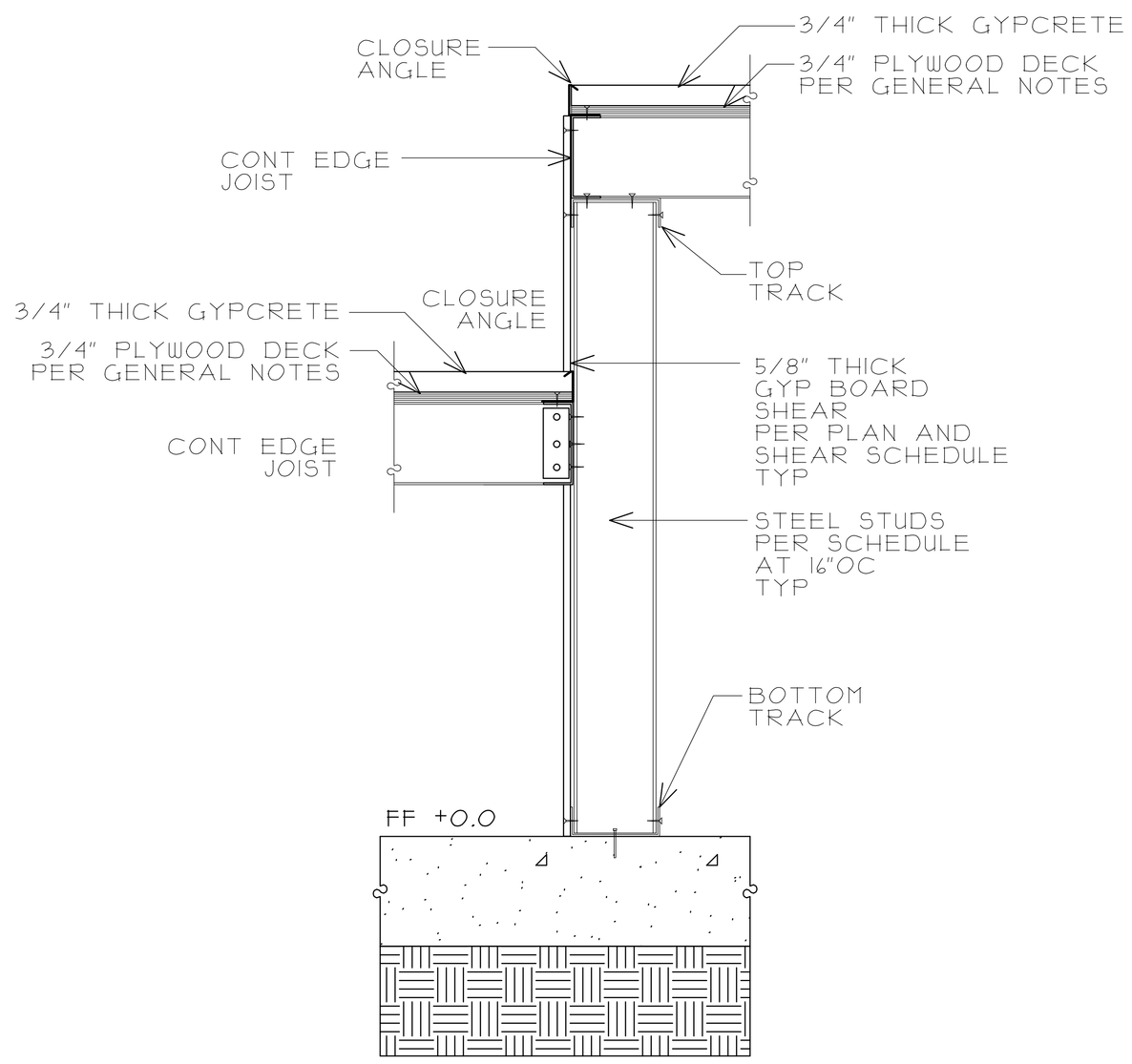

C/S2.0

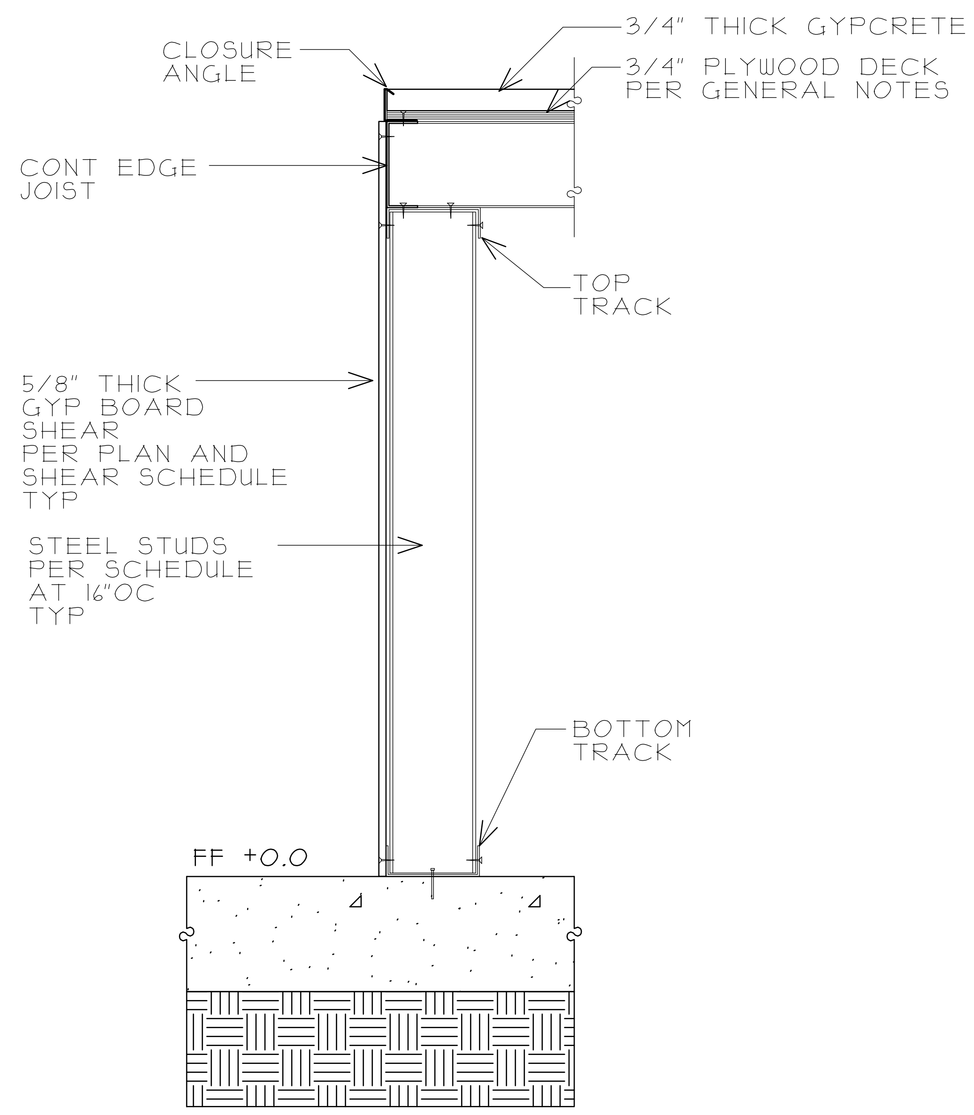

B/S2.0

REVISION	DATE	BY

REGISTERED PROFESSIONAL ENGINEER SCOTT JOHN SANDERS S 3902 EXP. 2-30-16 STRUCTURAL STATE OF CALIFORNIA

Wednesday, December 2, 2015

Scott J. Sanders, SE INC.
Consulting Structural Engineers
Arizona, California, Hawaii, Nevada, Washington
• PHONE (909) 625-1100 • FAX (909) 624-7963 • EMAIL sjs@scottsanders-se.com

THIS DRAWING IS AN INSTRUMENT OF SERVICE AND THE PROPERTY OF SCOTT J. SANDERS, SE. USE OF THIS DRAWING AND ALL REPRODUCTIONS SHALL BE RESTRICTED TO THE ORIGINAL SITE FOR WHICH IT WAS PREPARED AND SHALL NOT BE USED UNLESS PROPERLY SEALED AND APPROVED. PUBLICATION OF THIS DRAWING BY ANY METHOD IN WHOLE OR PART IS PROHIBITED WITHOUT WRITTEN PERMISSION OF SCOTT J. SANDERS, SE., WHERE A CONTRACTORS NAME APPEARS ON THE DRAWING, ALL WORK SHALL BE COMPLETED BY SAID CONTRACTOR, EXCEPT BY AGREEMENT WITH SAME CONTRACTOR.

CAT WALKS AND RAMPS AT
GET AIR
2735 SOUTH TOUNE AVE.
POMONA, CA 91766

DRAWN	SJS
CHECKED	SJS
DATE	10-28-15
SCALE	AS NOTED
JOB NO.	2717
SHEET	S2.0
	STRUCTURAL