EXHAUST FAN SCHEDULE

EF 1	MFR. & MODEL NO.:	COOK 120C2B
	FAN PERFORMANCE:	1,190 CFM @ 0.25" ESP
	RPM:	1,262
	MOTOR:	1/6 HP
	ELEC:	120V-1ø-60Hz
	WEIGHT:	97 LBS
	ACCESSORIES:	MANUFACTURER ROOF CURB AND BD-14 BACKDRAFT DAMPER
EF 2	MFR. & MODEL NO.:	COOK 120C2B
	FAN PERFORMANCE:	1,120 CFM @ 0.25" ESP
	RPM:	1,045
	MOTOR:	1/6 HP
	ELEC:	120V-1ø-60Hz
	WEIGHT:	97 LBS
	ACCESSORIES:	MANUFACTURER ROOF CURB AND BD-14 BACKDRAFT DAMPER
EF 3	MFR. & MODEL NO.:	COOK 80C2B
	FAN PERFORMANCE:	400 CFM @ 0.05" ESP
	RPM:	934
	MOTOR:	1/6 HP
	ELEC:	120V-1ø-60Hz
	WEIGHT:	70 LBS
	ACCESSORIES:	MANUFACTURER ROOF CURB AND BD-12 BACKDRAFT DAMPER
EF 4	MFR. & MODEL NO.:	COOK 120C2B
	FAN PERFORMANCE:	1,000 CFM @ 0.05" ESP
	RPM:	972
	MOTOR:	1/6 HP
	ELEC:	120V-1ø-60Hz
	WEIGHT:	97 LBS
	ACCESSORIES:	MANUFACTURER ROOF CURB AND BD-24 BACKDRAFT DAMPER

(E) RTU SCHEDULE

(E) RTU-1 (E) RTU-2 (E) RTU-3 (E) RTU-4 (E) RTU-5 (E) RTU-6 (E) RTU-7 (E) RTU-10	MFR. & MODEL NO.:	TRANE YFD151C4
	HEATING CAPACITY:	150,000 BTU/H INPUT 122,000 BTU/H OUTPUT
	COOLING CAPACITY:	155,000 TOTAL CAPACITY 138,000 SENSIBLE CAPACITY
	FAN PERFORMANCE:	5,000 CFM @ .5 " ESP
	FAN RPM:	701
	MOTOR:	1.85 BHP
	ELECTRICAL:	460V- 3ø-60Hz 23.2 FLA 27.8 MCA 35 MOCP
	EFFICIENCY RATINGS:	11.3 EER
	WEIGHT & (HEIGHT):	1,900 (5'-6")
	OUTSIDE AIR:	800 CFM
	ACCESSORIES:	NEW PROGRAMMABLE T-STAT W/ TEMP SENSOR LOCATED IN RETURN AIR PLENUM
(E) RTU-8 (E) RTU-9	MFR. & MODEL NO.:	TRANE YSC120A4
	HEATING CAPACITY:	150,000 BTU/H INPUT 121,500 BTU/H OUTPUT
	COOLING CAPACITY:	120,000 TOTAL CAPACITY 113,100 SENSIBLE CAPACITY
	FAN PERFORMANCE:	4,000 CFM @ .5 " ESP
	FAN RPM:	873
	MOTOR:	1.76 BHP
	ELECTRICAL:	460V- 3ø-60Hz 20.8 FLA 25 MCA 35 MOCP
	EFFICIENCY RATINGS:	10.2 EER
	WEIGHT & (HEIGHT):	1,200 (5'-6")
	OUTSIDE AIR:	630 CFM
	ACCESSORIES:	NEW PROGRAMMABLE T-STAT W/ TEMP SENSOR LOCATED IN RETURN AIR PLENUM
(E) RTU-11	MFR. & MODEL NO.:	TRANE YSC072A4
	HEATING CAPACITY:	80,000 BTU/H INPUT 64,800 BTU/H OUTPUT
	COOLING CAPACITY:	72,700 TOTAL CAPACITY 64,500 SENSIBLE CAPACITY
	FAN PERFORMANCE:	2,400 CFM @ .5 " ESP
	FAN RPM:	743
	MOTOR:	0.71 BHP
	ELECTRICAL:	460V- 3ø-60Hz 12.5 FLA 15 MCA 35 MOCP
	EFFICIENCY RATINGS:	10.2 EER
	WEIGHT & (HEIGHT):	900 (4'-6")
	OUTSIDE AIR:	340 CFM
	ACCESSORIES:	NEW PROGRAMMABLE T-STAT W/ TEMP SENSOR LOCATED IN RETURN AIR PLENUM

MECHANICAL GENERAL NOTES

1. THE TOTAL INSTALLATION SHALL COMPLY WITH ANY AND ALL REQUIREMENTS OF THE LEGALLY CONSTITUTED AUTHORITIES HAVING JURISDICTION INCLUDING 2013 CBC (CALIFORNIA BUILDING CODE), 2013 CMC/CPC (CALIFORNIA MECHANICAL AND PLUMBING CODE) AND THE 2013 TITLE 24 ENERGY CODE.
2. THE CONTRACTOR SHALL VISIT THE SITE PRIOR TO BID AND SHALL THOROUGHLY FAMILIARIZE HIMSELF WITH THE EXISTING CONDITIONS UNDER WHICH HE WILL BE REQUIRED TO WORK.
3. ALL INDICATED DIMENSIONS ARE APPROXIMATE AND ARE GIVEN FOR ESTIMATE PURPOSES ONLY. BEFORE PROCEEDING WITH THE WORK THIS CONTRACTOR SHALL CAREFULLY CHECK AND VERIFY ALL DIMENSIONS, SIZES, REQUIRED CLEARANCES AND SHALL ASSUME FULL RESPONSIBILITY FOR THE FITTING OF ALL EQUIPMENT AND MATERIALS HEREIN REQUIRED TO OTHER PARTS OF THE WORK OF OTHER TRADES. DUCT DIMENSIONS SHOWN ON PLANS ARE NET INSIDE CLEAR.
4. THE DRAWINGS ARE ESSENTIALLY DIAGRAMMATIC TO THE EXTENT THAT ALL OFFSETS, BENDS, SPECIAL FITTINGS AND LOCATIONS ARE NOT EXACTLY LOCATED. ALL DUCTWORK DIMENSIONS SHOWN ON THE DRAWINGS ARE NET INSIDE DIMENSIONS. DO NOT FABRICATE DUCTWORK FROM THESE DRAWINGS. THE MECHANICAL CONTRACTOR IS RESPONSIBLE FOR SUPPLYING SHOP DRAWINGS WHICH REFLECT THE PROPOSED INSTALLATION. THE SHOP DRAWINGS MUST BE APPROVED BY THE ENGINEER PRIOR TO ANY SHEET METAL FABRICATION. THE MECHANICAL CONTRACTOR IS RESPONSIBLE FOR PROVIDING ACCURATE AS-BUILT DRAWINGS AT THE COMPLETION OF THE PROJECT AND SUBMITTING THEM TO THE ENGINEER AND OWNER.
5. IN THE PREPARATION OF THESE DOCUMENTS, CERTAIN ASSUMPTIONS ARE MADE REGARDING EXISTING CONDITIONS. SOME OF THESE ASSUMPTIONS MAY NOT BE VERIFIABLE WITHOUT EXPENDING ADDITIONAL SUMS OF MONEY OR DESTROYING OTHERWISE ADEQUATE OR SERVICEABLE PORTIONS OF EXISTING BUILDINGS AND/OR EQUIPMENT. THEREFORE, THE ENGINEER SHALL NOT BE HELD RESPONSIBLE FOR ANY CHANGES OR ADDITIONAL COSTS INCURRED DUE TO EXISTING CONDITIONS.
6. THE CONTRACTOR SHALL COMPLY WITH ALL CONTRACT DOCUMENTS IN LAYING OUT HIS WORK AND EQUIPMENT. HE SHALL COORDINATE THE WORK OF THIS SECTION WITH THE WORK OF OTHER TRADES AND ALL JOB CONDITIONS.
7. THE INSTALLATION OF ACCESS PANELS OR OTHER INDICATING EQUIPMENT OR SPECIALTIES REQUIRING READING, ADJUSTMENT, INSPECTION, REPAIRS, REMOVAL OR REPLACEMENT SHALL BE CONVENIENTLY LOCATED WITH REFERENCE TO THE FINISHED BUILDING.
8. WHERE MATERIAL IS SHOWN ON THE DRAWINGS BUT NOT SPECIFIED, IT SHALL BE OF THE SAME TYPE AND QUALITY AS EXISTING MATERIAL.
9. PROVIDE MANUAL VOLUME DAMPERS AT UPSTREAM PORTION OF ALL TERMINAL AIR BRANCHES. THESE SHALL BE OF THE LOCKING QUADRANT TYPE. WHERE LOCATED OVER SLOPED OR HARD CEILINGS, PROVIDE DURO-DYNE ANGLE GEAR DRIVE OR BOWDEN CABLE CONTROL SYSTEM OR PROVIDE UNITED ENERTECH POWER/BALANCE SYSTEM. REMOTE PLATE LOCATIONS TO BE LOCATED AS DETERMINED BY ARCHITECT.
10. PROVIDE MINIMUM 1" ACOUSTICAL LINING IN ALL DUCTWORK WITHIN 10 FEET OF ALL AIR MOVING EQUIPMENT. PROVIDE DURO-DYNE FLEXIBLE CONNECTION AT ALL DUCT AT EQUIPMENT LOCATIONS.
11. INSULATION THICKNESS FOR ENERGY PERFORMANCE SHALL BE BASED ON TITLE 24 ENERGY CODE AND REGULATIONS OR UNLESS OTHERWISE STATED ON FLOOR PLANS.
12. WHERE NOT SPECIFICALLY INDICATED OTHERWISE, ALL DUCTWORK AND EQUIPMENT SHALL BE SUPPORTED PER THE SMACNA GUIDELINES FOR SEISMIC RESTRAINT AND CURRENT APPLICABLE UNIFORM MECHANICAL CODE.
13. WHEN A FIRE ALARM SYSTEM WITH FULL COVERAGE SMOKE DETECTORS ARE PROVIDED, DUCT SMOKE DETECTORS MAY BE ELIMINATED. FIRE ALARM CONTRACTOR SHALL WIRE SMOKE/FIRE DAMPER ACTIVATORS TO AREA SMOKE DETECTORS.
14. TESTING, ADJUSTING, AND BALANCING (TAB) OF THE AIR CONDITIONING SYSTEMS AND RELATED ANCILLARY EQUIPMENT WILL BE PERFORMED BY A CERTIFIED, INDEPENDENT THIRD PARTY, AABC AGENCY PROCURED BY THE MECHANICAL CONTRACTOR. A COMPLETE AIR BALANCE REPORT TO BE SUBMITTED TO THE ADMINISTRATIVE AUTHORITY AND TO THE MECHANICAL ENGINEER AND APPROVED PRIOR TO FINAL PAYMENT.
15. AIR HANDLING DUCT SYSTEMS SHALL BE CONSTRUCTED, INSTALLED AND INSULATED AS PROVIDED IN CHAPTER 6 OF 2013 CMC.
16. MATERIALS EXPOSED WITHIN DUCTS OR PLENUMS SHALL BE NONCOMBUSTIBLE OR SHALL HAVE FLAME SPREAD INDEX NOT GREATER THAN 25 AND A SMOKE DEVELOPED INDEX NOT GREATER THAN 50 (2013 CMC SECTION 602.2).
17. UNLESS OTHERWISE STATED, MAXIMUM LENGTH FOR FLEXIBLE DUCTWORK SHALL NOT EXCEED SEVEN FEET (7'-0"). ALUMINUM FLEX DUCTWORK WILL NOT BE ALLOWED ON ANY PORTION OF THE DUCTWORK SYSTEM.
18. ANY SUBSTITUTION MADE BY THE CONTRACTOR THAT IS DIFFERENT FROM WHAT IS SPECIFIED ON THE DRAWINGS SHALL BE CLEARLY INDICATED ON THE SUBMITTAL AS TO ALL THAT IS BEING SUBSTITUTED.
19. AT THE TIME OF ROUGH INSTALLATION, OR DURING STORAGE ON THE CONSTRUCTION SITE AND UNTIL FINAL STARTUP OF THE HEATING AND COOLING EQUIPMENT, ALL DUCT AND OTHER RELATED AIR DISTRIBUTION COMPONENT OPENINGS SHALL BE COVERED WITH TAPE, PLASTIC, SHEET METAL OR OTHER METHODS ACCEPTABLE TO THE ENFORCING AGENCY TO REDUCE THE AMOUNT OF DUST OR DEBRIS WHICH MAY COLLECT IN THE SYSTEM.
20. AIR CONDITIONING REFRIGERATION SERVICE PORTS LOCATED OUTDOORS SHALL BE FITTED WITH LOCKING TYPE TAMPER RESISTANT CAP OR SHALL BE PROTECTED FROM UNAUTHORIZED ACCESS BY A MEANS ACCEPTABLE TO THE BUILDING DEPARTMENT PER CMC SECTION 1106.14.
21. ALL DUCTS WILL BE PAINTED, CONTRACTOR SHALL ENSURE DUCT SURFACE IS PAINT READY. (2)

AIR DISTRIBUTION SCHEDULE

SYMBOL	DESCRIPTION	MANUFACTURER & MODEL NO.	FINISH	ACCESSORIES
CD	CEILING DIFFUSER	"KRUEGER" MODEL 1240	PER ARCH	W/ FILLER PANEL
CE / CR	CEILING REGISTER	"KRUEGER" MODEL 580	PER ARCH	W/ FILLER PANEL
SG	SUPPLY SIDEWALL GRILLE	"KRUEGER" MODEL 880	PER ARCH	–
RG	RETURN SIDEWALL GRILLE	"KRUEGER" MODEL 810	PER ARCH	–

CONCENTRIC DIFFUSER SCHEDULE

CD 1 / CD 2	MFR. & MODEL NO.:	RUSKIN DLD-2010

SPLIT SYSTEM COOLING SCHEDULE

FC 1	MFR. & MODEL NO.:	FUJITSU ASU18RLF
	FAN PERFORMANCE:	540 CFM @ 1,470 RPM
	DX COIL:	2 ROWS
	MOTOR:	64 WATTS
	ELECTRICAL:	208V.-1ø-60Hz. .24 FLA, .3 MCA, 15 MOCP
	WEIGHT:	31 LBS.
	OPTIONS:	LOW AMBIENT KIT AND CONDENSATE PUMP
CU 1	MFR. & MODEL NO.:	FUJITSU AOU18RLF
	HEATING CAPACITY:	21,600 BTU/H
	COOLING CAPACITY:	18,000 BTU/H TOTAL CAPACITY 14,400 BTU/H SENSIBLE CAPACITY
	ELECTRICAL:	208V.-1ø-60Hz. 11.6 FLA, 14.5 MCA, 30 MOCP
	WEIGHT:	135 LBS.
	SEER:	19.2
	OUTDOOR SOUND RATING:	50 DECIBELS

HVAC LEGEND

SYMBOL	ABBREVIATIONS	DESCRIPTION
		SQ., RECT. OR ROUND DUCT AS NOTED
		DUCT WITH ACOUSTICAL LINER
		EXIST. DUCT OR EQUIP. TO REMAIN
		EXIST. DUCT OR EQUIP. TO BE REMOVED
		FLEXIBLE DUCT
	CD	CEILING DIFFUSER, SUPPLY
	CR	CEILING REGISTER, RETURN & EXHAUST
	SD / SR	TOP REGISTER & BOTTOM REGISTER
		SECTION THROUGH DUCT
		DUCT DOWN
		SQUARE TO ROUND TRANSITION
		DUCT ACCESS DOOR
		DUCT WITH TURNING VANES
AD-1		EQUIP. DESIGNATION AND NO.
	SFD	COMBINATION SMOKE / FIRE DAMPER
	MVD	MANUAL VOLUME DAMPER
	OBD	OPPOSED BLADE DAMPER
		PARALLEL DAMPER
T	T'STAT	THERMOSTAT
CO2	CO2 SENSOR	CO2 SENSOR
B		BY-PASS TIMER
BD		BACK DRAFT DAMPER
M		MASTER CONTROL STAT
H		HUMIDISTAT
HI		HUMIDITY INDICATOR
DD		DUCT MOUNTED SMOKE DETECTOR
RS		REMOTE SENSOR
	A.F.F.	ABOVE FINISHED FLOOR
	CFM	CUBIC FEET OF AIR PER MINUTE
	CFMS	CFM SUPPLY
	CFMR	CFM RETURN
	CFME	CFM EXHAUST
	O.S.A.	OUTSIDE AIR
	(N)	NEW
	(E) OR EXIST.	EXISTING
	30/10	INDICATES OVAL DUCT (INCHES)
	30X10	INDICATES SQUARE DUCT (INCHES)
	10ø	INDICATES ROUND DUCT (INCHES)
	P.O.C	POINT OF CONNECTION
	P.O.D.	POINT OF DEMOLITION
M		MOTORIZED DAMPER
	REFR.	REFRIGERANT LINES

ANCHORAGE AND BRACING NOTES

1. PIPES, DUCTS AND CONDUITS SHALL BE SUPPORTED AND BRACED PER THE SMACNA "GUIDELINES FOR SEISMIC RESTRAINTS OF MECHANICAL SYSTEMS AND PLUMBING SYSTEMS", THE "SUPERSTRUT SEISMIC RESTRAINT SYSTEM" FOR PIPES AND CONDUITS ONLY.

STEVEN W. JOHNSON REGISTERED PROFESSIONAL ENGINEER No. 33209 EXP. 9-30-2017 MECHANICAL STATE OF CALIFORNIA

DESIGN WEST ENGINEERING
MECHANICAL • ELECTRICAL • ENERGY CONSULTANTS
275 W. Hospitality Lane, Suite #100
San Bernardino, CA 92408
Phone: 909.890.3700
Fax: 909.890.3770
Email: cadd@designwesteng.com

THESE DRAWINGS AND SPECIFICATIONS ARE THE SOLE PROPERTY OF WHEELER & WHEELER ARCHITECTS, INC. AND SHALL NOT BE REPRODUCED WITHOUT WET-STAMP AND SIGNATURE OF ARCHITECT OF RECORD. THESE DRAWINGS AND SPECIFICATIONS NOT TO BE USED FOR ANY OTHER WORK, OR PORTION THEREOF, THAN THAT NOTED ON TITLE BLOCK. PLEASE CONTACT ARCHITECT OF RECORD AT 405 624-5095 IF ANY ATTEMPT IS MADE TO DO SO

© 2011 WHEELER & WHEELER ARCHITECTS, INC.

NO.	DATE	REVISION
1	0.28.15	PLAN CHECK SUBMITTAL
2	12.14.15	PLAN CHECK REVISIONS

WHEELER & WHEELER
ARCHITECTS
ARCHITECTURE ■ INTERIORS ■ PLANNING
133 South Spring Street, Claremont, California 91711 909-624-5095 FAX 909-621-7757
Page S. WHEELER AIA Architect C12183 MICHAEL A. WHEELER AIA Architect C12183

MECHANICAL LEGEND NOTES & SCHEDULES

TENANT IMPROVEMENT & EXTERIOR FACADE IMPROVEMENTS for:

Get Air

S.E. Quadrant, Pomona 60 FWY at Corona Expressway
Pomona, California 91766

APN NO. 8331-016-021

DATE	03.04.15
JOB NO.	AIR-2521
DRAWN BY	S.J.

DRAWING NO.

M0.0

15-355

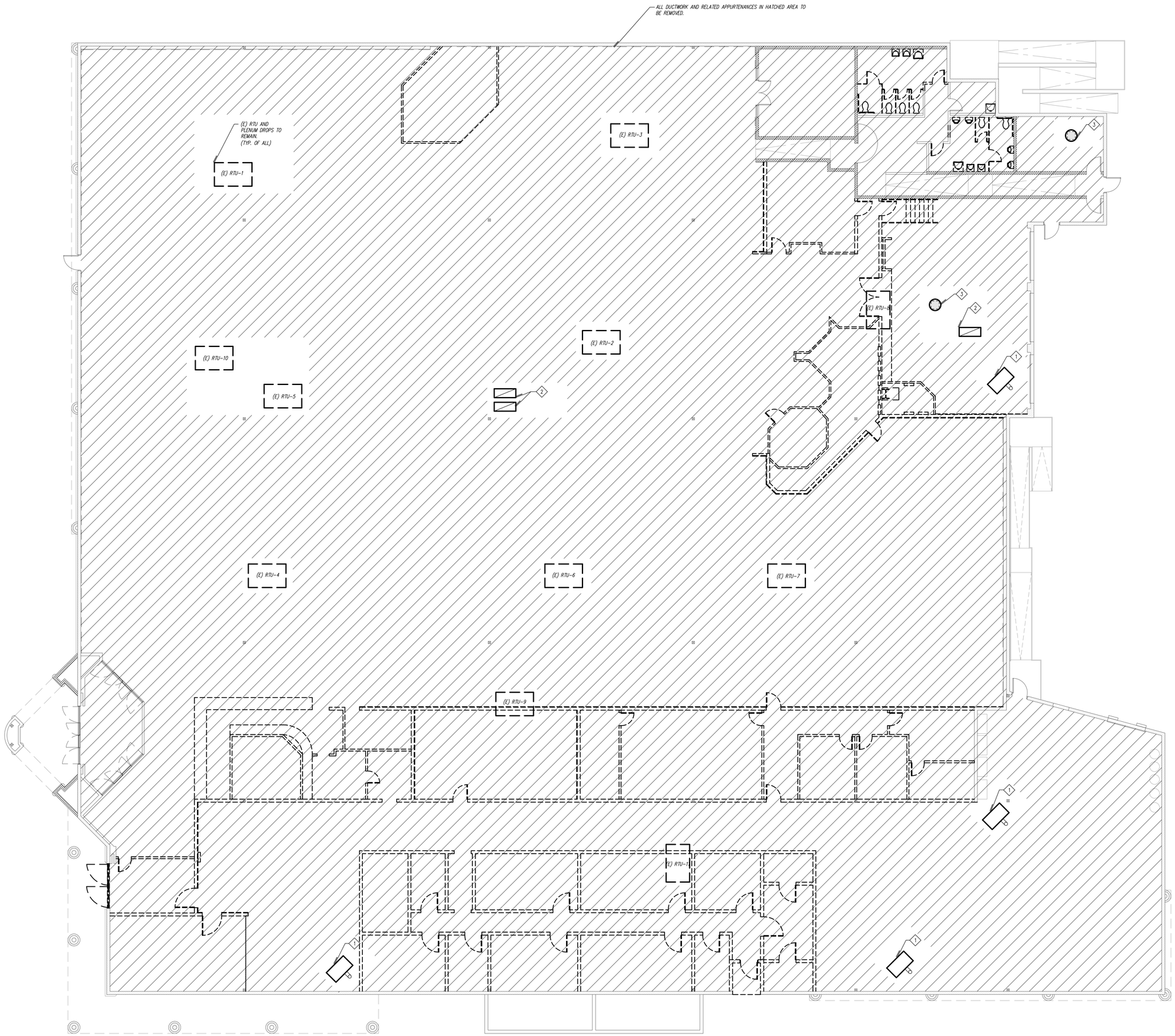

DEMO NOTES

1. REMOVE SPACE HEATER AND RELATED APPURTENANCES. DISCONNECT AND CAP GAS PIPE ON ROOF. REMOVE FLUE THRU ROOF AND REPAIR ROOF AS NEEDED TO MAINTAIN EXISTING ROOF WARRANTY.
2. (E) RELIEF AIR OPENING TO REMAIN.
3. (E) EXHAUST FAN ON ROOF AND ALL RELATED DUCTWORK TO BE REMOVED. CURB SHALL BE CAPPED WITH A MINIMUM OF R-30 INSULATION ON UNDERSIDE OF CAP.
4. (E) RELIEF AIR OPENING AND HOOD TO BE REMOVED. CURB SHALL BE CAPPED WITH A MINIMUM OF R-30 INSULATION ON UNDERSIDE OF CAP.

MECHANICAL DEMO FLOOR PLAN | SCALE: 1/8" = 1'-0" | 1

THESE DRAWINGS AND SPECIFICATIONS ARE THE SOLE PROPERTY OF WHEELER & WHEELER ARCHITECTS, INC. AND SHALL NOT BE REPRODUCED WITHOUT WET STAMP AND SIGNATURE OF ARCHITECT OF RECORD. THESE DRAWINGS AND SPECIFICATIONS TO BE USED FOR ANY OTHER WORK, OR PORTION THEREOF, THAN THAT NOTED ON TITLE BLOCK, PLEASE CONTACT THE ARCHITECT OF RECORD AT 626.624.5095 IF ANY ATTEMPT IS MADE TO DO SO
© 2011 WHEELER & WHEELER ARCHITECTS, INC.

NO.	DATE	REVISION
1	0.28.15	PLAN CHECK SUBMITTAL
2	12.14.15	PLAN CHECK REVISIONS

WHEELER & WHEELER
ARCHITECTS
ARCHITECTURE ■ INTERIORS ■ PLANNING
133 South Spring Street, Claremont, California 91711 909-624-5095 FAX 909-621-7757
Reg. # 6-6122 AA Annual C-21282 MEMBER AIA Annual C14183

MECHANICAL DEMO FLOOR PLAN

TENANT IMPROVEMENT & EXTERIOR FACADE IMPROVEMENTS for:

Get Air

S.E. Quadrant, Pomona 60 FWY at Corona Expressway
Pomona, California 91766

APN NO. 8331-016-021

DATE	JOB NO.	DRAWN BY
03.04.15	AIR-2521	S.J.

DRAWING NO.
M1.0

REGISTERED PROFESSIONAL ENGINEER
STEVEN W. JOHNSON
No. 33209
EXP. 9-30-2017
MECHANICAL
STATE OF CALIFORNIA

275 W. Hospitality Lane, Suite #100
San Bernardino, CA 92408
Phone: 909.890.3700
Fax: 909.890.3770
Email: cadd@designwesteng.com

DESIGN WEST ENGINEERING
MECHANICAL • ELECTRICAL • ENERGY CONSULTANTS

15-355

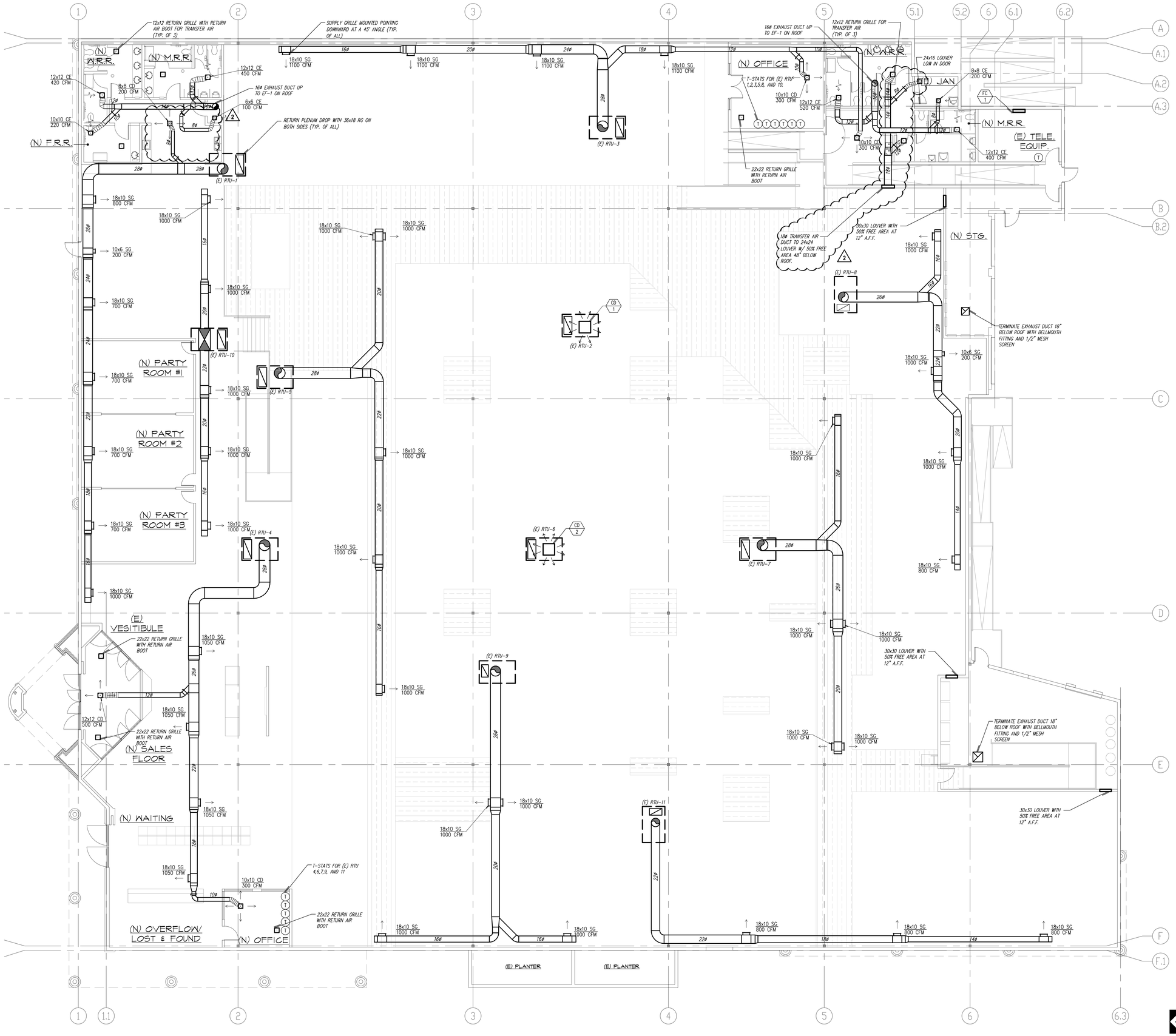

CONSTRUCTION NOTES

1. ALL SPIN-IN OR TAP TYPE DUCT CONNECTIONS SHALL BE PROVIDED WITH AN EXTRACTOR.
2. T-STATS SHALL NOT BE MOUNTED IN DIRECT LINE OF ANY SUPPLY DIFFUSER OR NEAR ANY HEAT REJECTION EQUIPMENT.
3. DUCT DIMENSIONS ARE INSIDE CLEAR, ADD AN ADDITIONAL 2" MINIMUM FOR R-8 DUCT INSULATION. SIZES MAY CHANGE PER MANUFACTURE.
4. ALL DUCTWORK SHALL BE HARD DUCT. FLEX DUCT MAY BE USED ONLY AT SUPPLY & RETURN OUTLETS AT A MAX. LENGTH OF 7'-0".
5. ALL VENTING SHALL HAVE A MIN. OF 10' CLEARANCE FROM ANY FORCED AIR INLET W/ A MIN. OF 3' CLEARANCE ABOVE & A MIN OF 4' CLEARANCE FROM ANY PROPERTY LINE EXCEPT A PUBLIC WAY. PER SEC. 906
6. PROVIDE 1" ACOUSTICAL LINING IN ALL DUCTWORK WITHIN 10 FEET OF ALL AIR MOVING EQUIPMENT. PROVIDE DURO-DYNE FLEXIBLE CONNECTION AT ALL DUCT AT EQUIPMENT LOCATIONS.
7. CONTRACTOR TO PROVIDE 22 G.A. DUCT FOR ALL DUCTWORK THAT IS PASSING THRU AND LOCATED WITH IN A RATED AREA AND THAT DOES NOT HAVE ANY AIR DISTRIBUTION INTO THE RATED AREA. FIRE SEAL AROUND DUCT AT EACH PENETRATION THROUGH RATED WALLS. PER CBC SEC. 709 & 710.
8. ALL THERMOSTATS SHALL BE PROGRAMMED TO RUN IN FAN MODE WORK DURING OCCUPIED HOURS AND SHALL COORDINATE HOURS WITH OWNER. COOLING/ HEATING MODE SHALL RUN AS NEED, PER TEMPERATURE SET POINT AND OCCUPANT LOAD.
9. ALL RESTROOM DOORS SHALL HAVE A 1" UNDERCUT.
10. CONTRACTOR TO PROVIDE 22 G.A. DUCT THRU RATED WALL AND FIRE SEAL AROUND DUCT PER UBC SEC. 709 & 710.
11. CONTRACTOR SHALL PATCH ALL ROOF PENETRATIONS AS NEED TO MAINTAIN EXISTING ROOFING WARRANTY.
12. ALL DUCTS WILL BE PAINTED, CONTRACTOR SHALL ENSURE DUCT SURFACE IS PAINT READY.

CONSTRUCTION NOTES

THESE DRAWINGS AND SPECIFICATIONS ARE THE SOLE PROPERTY OF WHEELER & WHEELER ARCHITECTS, INC. AND SHALL NOT BE REPRODUCED WITHOUT WET STAMP AND SIGNATURE OF ARCHITECT OF RECORD. THESE DRAWINGS ARE NOT TO BE USED FOR ANY OTHER WORK, OR PORTION THEREOF THAN THAT NOTED ON TITLE BLOCK. PLANS ARE TO BE DRAWN TO SCALE. CONTACT 425.624.5095 IF ANY ATTEMPT IS MADE TO DO SO
© 201 WHEELER & WHEELER ARCHITECTS, INC.

NO.	DATE	REVISION
1	0.28.15	PLAN CHECK SUBMITTAL
2	12.14.15	PLAN CHECK REVISIONS

WHEELER & WHEELER
ARCHITECTS
ARCHITECTURE ■ INTERIORS ■ PLANNING
133 South Spring Street, Claremont, California 91711 909-624-5095 FAX 909-621-7757
Reg. # 6-6-6-6 as licensed C-21180 WHEELER & WHEELER ARCHITECTS, INC. (1985)

MECHANICAL REMODEL FLOOR PLAN

TENANT IMPROVEMENT & EXTERIOR FACADE IMPROVEMENTS for:

Get Air

S.E. Quadrant, Pomona 60 FWY at Corona Expressway
Pomona, California 91766

APN NO. 8331-016-021

DATE	JOB NO.	DRAWN BY
03.04.15	AIR-2521	SJ

DRAWING NO.

M2.0

STEVEN W. JOHNSON
REGISTERED PROFESSIONAL ENGINEER
No. 33209
EXP. 9-30-2017
MECHANICAL
STATE OF CALIFORNIA

275 W. Hospitality Lane, Suite #100
San Bernardino, CA 92408
Phone: 909.890.3700
Fax: 909.890.3770
Email: cadd@designwesteng.com

DESIGN WEST ENGINEERING
MECHANICAL • ELECTRICAL • ENERGY CONSULTANTS

MECHANICAL REMODEL FLOOR PLAN | SCALE: 1/8" = 1'-0" | 1

15-355

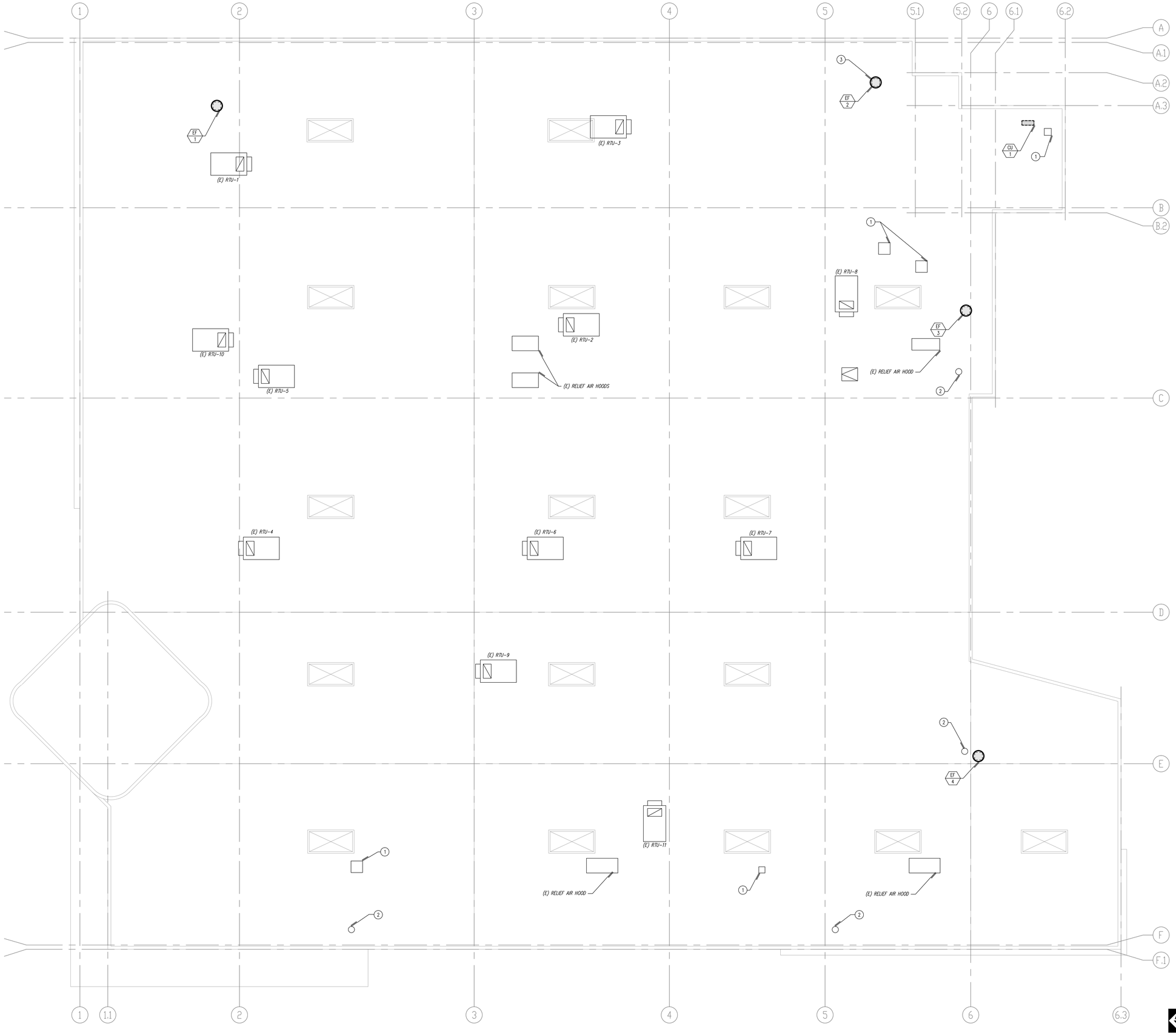

MECHAINCAL ROOF PLAN | SCALE: 1/8" = 1'-0" | 1

CONSTRUCTION NOTES

1. ALL VENTING SHALL HAVE A MIN. OF 10' CLEARANCE FROM ANY FORCED AIR INLET W/ A MIN. OF 3' CLEARANCE ABOVE & A MIN OF 4' CLEARANCE FROM ANY PROPERTY LINE EXCEPT A PUBLIC WAY. PER SEC. 906
2. CONTRACTOR SHALL PATCH ALL ROOF PENETRATIONS AS NEED TO MAINTAIN EXISTING ROOFING WARRANTY.

CONSTRUCTION NOTES

1. REMOVE (E) EQUIPMENT, CAP AND SEAL (E) ROOF CURB. INSULATE CAP WITH R-30 INSULATION.
2. REMOVE (E) FLUE VENT, REPAIR ROOF OPENING.
3. REMOVE (E) EXHAUST FAN AND RE-USE (E) CURB OPENING FOR (N) EF-2.

THESE DRAWINGS AND SPECIFICATIONS ARE THE SOLE PROPERTY OF WHEELER & WHEELER ARCHITECTS, INC. AND SHALL NOT BE REPRODUCED WITHOUT WRITTEN PERMISSION. NO OTHER USE SHALL BE MADE OF THEM WITHOUT THE WRITTEN CONSENT OF WHEELER & WHEELER ARCHITECTS, INC. PLEASE CONTACT THE ARCHITECT REGARDING ANY USE NEED FOR ANY OTHER WORK, OR PORTION THEREOF THAN THAT NOTED ON TITLE BLOCK. PLEASE CONTACT THE ARCHITECT REGARDING ANY ALTERATIONS TO THE PLANS. 425.624.5095 IF ANY ATTEMPT IS MADE TO DO SO

© 2011 WHEELER & WHEELER ARCHITECTS, INC.

NO.	DATE	REVISION
1	0.28.15	PLAN CHECK SUBMITTAL
2	12.14.15	PLAN CHECK REVISIONS

WHEELER & WHEELER
ARCHITECTS
ARCHITECTURE ■ INTERIORS ■ PLANNING
133 South Spring Street, Claremont, California 91711 909-624-5095 FAX 909-621-7757
Paul S. Wheeler AIA Architect C-12180 Michael A. Wheeler AIA Architect C-14183

MECHAINCAL ROOF PLAN

TENANT IMPROVEMENT & EXTERIOR FACADE IMPROVEMENTS for:

Get Air

S.E. Quadrant, Pomona 60 FWY at Corona Expressway
Pomona, California 91766

APN NO. 8331-016-021

REGISTERED PROFESSIONAL ENGINEER
STEVEN M. JOHNSON
No. 33209
EXP. 9-30-2017
MECHANICAL
STATE OF CALIFORNIA

275 W. Hospitality Lane, Suite #100
San Bernardino, CA 92408
Phone: 909.890.3700
Fax: 909.890.3770
Email: cadd@designwesteng.com

DESIGN WEST ENGINEERING
MECHANICAL • ELECTRICAL • ENERGY CONSULTANTS

DATE	03.04.15
JOB NO.	AIR-2521
DRAWN BY	SJ

DRAWING NO.
M3.0

15-355

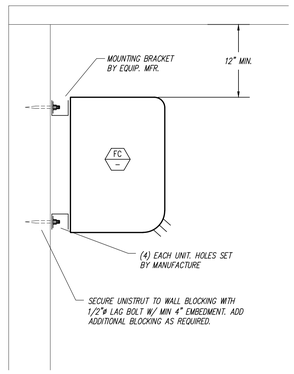

-	13	FAN COIL MOUNTING DETAIL	9

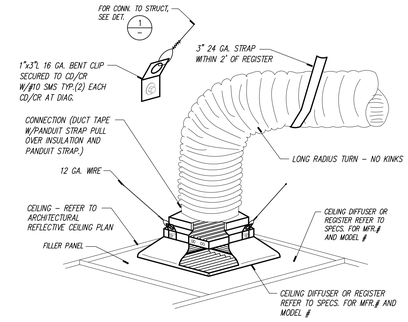

AIR DISTRIBUTION DETAIL	5

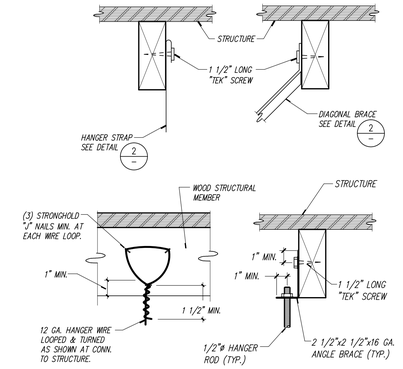

CONNECTION TO STRUCTURE DETAIL	1

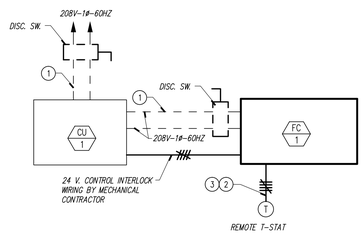

-	14	SPLIT SYSTEM WIRING	10

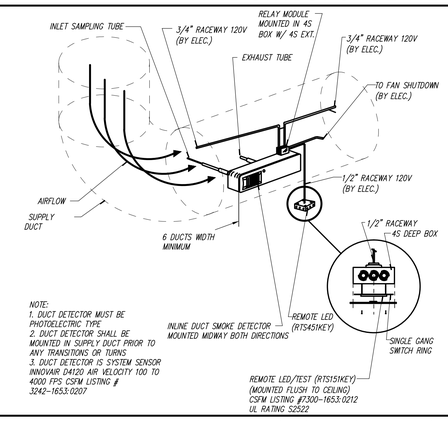

DUCT DETECTOR MOUNTING	6

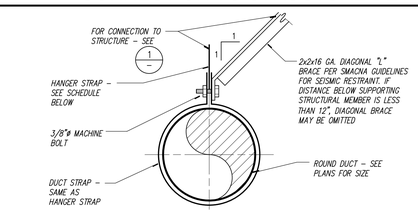

NOTE: PER 2013 SMACNA HVAC DUCT CONSTRUCTION STANDARDS AND 2013 CMC SECTION 603

HORIZONTAL	HANGER STRAP SCHEDULE		
DUCT SIZE	HANGER SIZE	MAX. SPACING	MATERIAL
UP THRU 10"	1" x 22 GA.	10'–0" O/C	G.I. STEEL
11" TO 20"	1" x 22 GA.	10'–0" O/C	G.I. STEEL
21" TO 40"	1" x 20 GA.	10'–0" O/C	G.I. STEEL
DUCT SIZE	HANGER SIZE	MAX. SPACING	MATERIAL
UP THRU 10"	2" x 18 GA.	12'–0" O/C	G.I. STEEL
11" TO 20"	2" x 16 GA.	12'–0" O/C	G.I. STEEL
21" TO 40"	1/8" STEEL X 1–1/2"	12'–0" O/C	G.I. STEEL

DUCT SUPPORT DETAIL	2

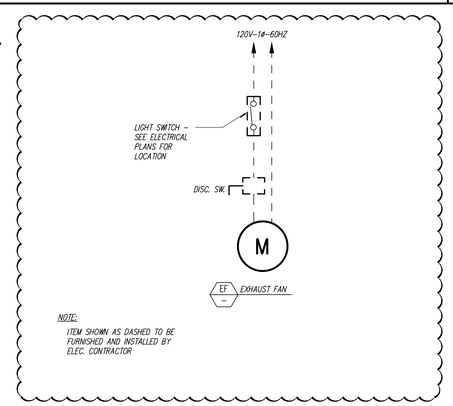

-	15	-	11	WIRING DIAGRAM	7

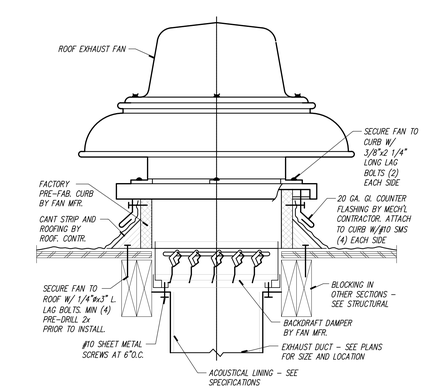

EF MOUNTING	3

-	16	-	12	CONDENSING UNIT MOUNTING	8

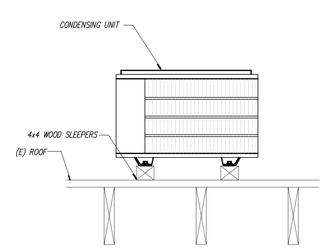

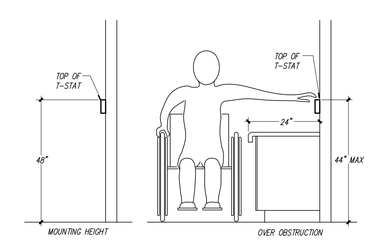

T-STAT MOUNTING	4

REGISTERED PROFESSIONAL ENGINEER
STEVEN M. JOHNSON
No. 33209
EXP. 9-30-2017
MECHANICAL
STATE OF CALIFORNIA

273 W. Hospitality Lane, Suite #100
San Bernardino, CA 92408
Phone: 909.890.3700
Fax: 909.890.3770
Email: coad@designwesteng.com

DESIGN WEST ENGINEERING
MECHANICAL • ELECTRICAL • ENERGY CONSULTANTS

THESE DRAWINGS AND SPECIFICATIONS ARE THE SOLE PROPERTY OF WHEELER & WHEELER ARCHITECTS, INC. AND SHALL NOT BE REPRODUCED WITHOUT WET STAMP AND SIGNATURE OF ARCHITECT OF RECORD. THESE DRAWINGS AND SPECIFICATIONS TO BE USED FOR ANY OTHER WORK, OR PORTION THEREOF, THAN THAT NOTED ON TITLE BLOCK, IS PROHIBITED WITHOUT WRITTEN CONSENT OF WHEELER & WHEELER ARCHITECTS, INC. 425.624.5095 IF ANY ATTEMPT IS MADE TO DO SO

© 2011 WHEELER & WHEELER ARCHITECTS, INC.

NO.	DATE	REVISION
1	0.28.15	PLAN CHECK SUBMITTAL
2	12.14.15	PLAN CHECK REVISIONS

WHEELER & WHEELER
ARCHITECTS
ARCHITECTURE ■ INTERIORS ■ PLANNING
133 South Spring Street, Claremont, California 91711 909-624-5095 FAX 909-621-7757
PAUL R. WHEELER AIA NAVAHO ST. CA 91711

MECHANICAL DETAILS

TENANT IMPROVEMENT & EXTERIOR FACADE IMPROVEMENTS for:

Get Air

S.E. Quadrant, Pomona 60 FWY at Corona Expressway
Pomona, California 91766

APN NO. 8331-016-021

DATE	JOB NO.	DRAWN BY
03.04.15	AIR-2521	SJ

DRAWING NO.

M4.0

15–355